OPERATION MANUAL

# Kebab MkII system
# Kebab MkII L system
## OPERATION MANUAL

TABLE OF CONTENS


**Foreword ..... 2**
DISCLAIMER OF WARRANTY ..... 2
Requests ..... 2
Interference to televisions and radios ..... 2
**For safe operation ..... 3**
Symbols ..... 3
**Configuration and Function ..... 9**
Front view of Kebab MkII system ..... 9
Rear view of Kebab MkII system ..... 9
Front view of Kebab MkII L system ..... 10
Rear view of Kebab MkII L system ..... 10
**Usable works ..... 11**
**Installation of Kebab MkII system ..... 12**
Attach Kebab MkII/Kebab MkII L system ..... 12
Attach Kebab MkII system on UJF-3042MkIIseries,UJF200-3042 ... 12
Remove the Kebab MkII system from UJF-3042MkIIseries, UJF200-3042 ..... 16
Attach Kebab MkII L system on UJF-6042MkIIseries, UJF200-6042 19
Remove the Kebab MkII L system from UJF-6042MkIIseries, UJF200-6042 ..... 23
Attach Kebab MkII L system on UJF-7151 plus series ..... 27
Remove the Kebab MkII L system from UJF-7151 plus series ..... 30
**Set a work ..... 32**
Set a work ..... 32
Attention when using a work of the different diameter from the previously used work ..... 33
**Use the work holder ..... 34**
**Remove the work holder ..... 37**
**Use the origin mark detection ..... 38**
Set the origin mark detection ..... 38
Use the origin mark ..... 39
When not using the Origin mark sensor ..... 40
Responding to “ERROR 524 WORK ORIGN MARK” ..... 41
**Set the start position of drawing ..... 42**
**Set the Feed Direction Origin to the Center (UJF200 Only) ..... 43**
Measure the work size ..... 43
**Create data to be drawn ..... 44**
Measure the work size ..... 44
**Test drawing ..... 45**
**Enable Kebab printing ..... 46**
**Drawing an image from source data ..... 47**
Starting the drawing operation ..... 47
Interruption of drawing ..... 49
**Maintenance ..... 54**
Cleaning the roller shafts ..... 54
Cleaning the Origin mark sensor ..... 55
**Specifications ..... 56**



**MIMAKI ENGINEERING CO., LTD.**
https://mimaki.com/
D203140-31

# Foreword

Thank you very much for purchasing Kebab MkII system/Kebab MkII L system this time.

Kebab MkII system/Kebab MkII L system is a dedicated system to print any design you like on cylindrical work.

Fully read this manual and make use of it in drawing to suit the customer's needs.

Important!

- Kebab MkII is an option of UJF-3042 MkIIseries and UJF200-3042, and Kebab MkII L is an option of UJF-6042 MkIIseries,UJF-7151 Plus series and UJF200-6042. Fully read the instruction manual of printers together with this manual.

## DISCLAIMER OF WARRANTY

THIS LIMITED WARRANTY OF MIMAKI SHALL BE THE SOLE AND EXCLUSIVE WARRANTY AND IS IN LIEU OF ALL OTHER WARRANTIES, EXPRESS OR IMPLIED, INCLUDING, BUT NOT LIMITED TO, ANY IMPLIED WARRANTY OF MERCHANTABILITY OR FITNESS, AND MIMAKI NEITHER ASSUMES NOR AUTHORIZES DEALER TO ASSUME FOR IT ANY OTHER OBLIGATION OR LIABILITY OR MAKE ANY OTHER WARRANTY OR MAKE ANY OTHER WARRANTY IN CONNECTION WITH ANY PRODUCT WITHOUT MIMAKI'S PRIOR WRITTEN CONSENT.

IN NO EVENT SHALL MIMAKI BE LIABLE FOR SPECIAL, INCIDNETAL OR CONSEQUENTIAL DAMAGES OR FOR LOSS OF PROFITS OF DEALER OR CUSTOMERS OF ANY PRODUCT.

## Requests

- This Operation Manual has been carefully prepared for your easy understanding, however, please do not hesitate to contact a distributor in your district or our office if you have any inquiry.
- Description contained in this Operation Manual are subject to change without notice for improvement.
- Unauthorized reproduction of any portion of this document is strictly prohibited.
© 2016 MIMAKI ENGINEERING Co., Ltd.

## Interference to televisions and radios

The product described in this manual generates low radio waves while it is in operation. The product can interfere with radios and televisions if set up or commissioned under improper conditions. The product is not guaranteed against any damage to specific-purpose radios and televisions.

The product's interference with your radio or television will be checked by turning on/off the power switch of the product. In the event that the product is the cause of interference, try to eliminate it by taking one of the following corrective measures or taking some of them in combination.

- Change the direction of the receiving antenna or the feeder of your radio/television.
- Move the receiver away from the product.
- Plug the power cord of this machine into an outlet which is isolated from power circuits connected to the television set or radio.

# For safe operation

## Symbols

Symbols are used in this Operation Manual for safe operation and for prevention of damage to the machine. The indicated sign is different depending on the content of caution.

Symbols and their meanings are given below. Please follow these instructions as you read this manual.

| | Contents |
|---|---|
|   | Failure to observe the instructions given with this symbol can result in death or serious injuries to personnel. Be sure to read it carefully and use it properly. |
|   | Failure to observe the instructions given with this symbol can result in injuries to personnel or damage to property. |
|   | Important notes in use of this machine are given with this symbol. Understand the notes thoroughly to operate the machine properly. |
|  | Useful information is given with this symbol. Refer to the information to operate the machine properly. |
|  | Indicates the reference page for related contents. |
|  | The symbol “△” indicates that the instructions must be observed as strictly as the CAUTION instructions (including DANGER and WARNING instructions). A sign representing a precaution (the sign shown at left warns of hazardous voltage) is shown in the triangle. |
|  | The symbol “⃠” indicates that the action shown is prohibited. A sign representing a prohibited action (the sign shown at left prohibits disassembly) is shown in or around the circle. |
|  | The symbol “●” indicates that the action shown must be taken without fail or the instructions must be observed without fail. A sign representing a particular instruction (the sign shown at left instructs to unplug the cable from the wall outlet) is shown in the circle. |

## ⚠ WARNING

- Be sure to setup the appropriate air-moving system in case of using this machine in a closed room or a room with bad ventilation.

**Cautions for constructing exhaust outlet**

Please observe the following cautions to avoid breakdown of this machine.
(1) The opening area of the exhaust outlet requires more than half of the duct entrance area.
(2) If mounting a valve on the exhaust outlet, be sure to open the valve when using the machine.

- The ink used for this machine falls into the category of UN No.3082 and UN Class 9. Since the ink is flammable, never use fire when using the machine.
- When cleaning the ink station or the head, be sure to wear the supplied goggle and gloves since you may get ink or cleaning solution in your eyes.
- If anyone swallows ink or cleaning solution in mistake, get the person to vomit and see a doctor immediately. Do not let him or her swallow the vomit. Then, contact the Poison Control Center.
- If you inhale a lot of vapor and feel bad, immediately move to a location of fresh air and then keep yourself warm and quiet. Then, consult a doctor as soon as possible.
- Discard the waste ink according to the local regulations of the area that this machine is used.

## Never do the following

## ⚠ WARNING

### Do not disassemble or remodel the machine

- Never disassemble or remodel this machine and the ink cartridge.
  Disassembling or remodeling any of them will result in electric shocks or breakdown of this machine.

### Do not use this machine in damp places

- Avoid damp environment to use this machine. Do not splash water onto this machine. High humidity or water will give rise to fire, electric shocks or breakdown of this machine.

### Abnormal event occurs

- If the machine is used under an abnormal condition where the machine produces smoke or unpleasant smell, fire or electric shocks can result. Be sure to turn off the power switch immediately and detach the plug from the receptacle. Check first to be sure that the machine no longer produces smoke, and contact a distributor in your district for repair.
- Never repair your machine by yourself since it is very dangerous for you to do so.

### Handling of ink cartridges

- Some of the ingredients (UV Curing initiator) have toxic consequences to aquatic life. Avoid leak into water system or sewage containing water.
- Store ink cartridges and waste ink tank in a place that is out of the reach of children.
- If ink settles on the skin or clothes, immediately wash it off with detergent or water. If you get ink in your eyes, immediately wash your eyes with a lot of clean water, and then consult a doctor as soon as possible.

### Wearing protective devices

- When cleaning the suction nozzle, which may scatter ink, be sure to wear safety glasses and gloves, or ink and cleaning solution might enter your eyes or ink and cleaning solution put on your hands might make your hands rough.

### Handling of the power cable

- Use a power cable attached to this machine.
- Take care not to damage, break or work on the power cable. If a heavy things are put on the power cable, heated or drawn, the power cable can break to cause fire or electric shocks.

## ⚠ WARNING

### Power supply and voltage



- Use this machine with indicated power specifications.
  Be sure to connect the power cable plug to the grounded outlet, or it may cause fire or electric shock.





- Never look at the LED UV being lit with your naked eyes, or it may cause pain in your eyes or visual impairment. Be sure to wear safety glasses.
- Do not apply ultraviolet (UV) light directly to your skin, or it may cause irritation on your skin.



- To prevent electrical shock, be sure to set OFF the main power circuit breaker and disconnect the power plug before carrying out maintenance. For some units, capacitors may take one minute for discharging; therefore, start maintenance work three minutes after setting OFF the main power circuit breaker and disconnecting the power plug.
- If LED UV has been damaged, you should replace the LED UV that has reached or has past its rating life.



- The main power circuit breaker should be set ON only by personnel with sufficient knowledge about operations of this machine.
- Do not touch the lamp with bare hands while lighting or right after the lamp off to avoid from burn injury.

### Handling of LED UV



- Do not use the LED UV in an ambience with a possibility of catching fire (gasoline, combustible gas spray, thinner, lacquer, powder dust, etc.). In addition, do not put paper or cloth near or on the LED UV, or it may cause fire, or it may cause electrical shock.

### Handling of the antifreeze liquid



- Use the exclusive antifreeze liquid, or the cooling device may be damaged.
- If the antifreeze liquid or mixed soft water with antifreeze liquid gets on the skin or clothes, immediately wash it off with soap.
  If you get the antifreeze liquid in your eyes, immediately wash your eyes with a lot of clean water. Then, consult a doctor as soon as possible.
- Before using the antifreeze liquid, be sure to read the Material Safety Data Sheet (MSDS).
- If you swallowed the antifreeze liquid accidentally, try to get to vomit, and then consult a doctor as soon as possible.
- Discard the waste antifreeze liquid or used mixed soft water with antifreeze liquid as follows;
  Absorb in a sawdust or waste cloth, then incinerate it.
  Entrust to an industrial waste disposal contractor, clarifying their contents.
- Avoid causing ignition with static electricity, impact spark and so on.



- Be sure to wear goggles and gloves for handling the antifreeze liquid.

## Precautions for use

### ⚠ CAUTION

#### Protection against dust

- It is strongly recommended to use the machine in a room that is not dusty.
  Set the Refresh level 2 or 3 when in bad environment.
- When leaving the work place after the working hours, be sure to remove media from the printer.If any media is left on the printer, dust can put on it.
- Store media not to put dust on it. Wiping dust off the media, dust will be put on the media due to static electricity.
- Due to the dust on the head, ink drops will fall down on the media during printing. If so, be sure to clean up the head. (☞ Refer to the operation manual of being used.)

#### Periodic exchange parts

- There are some parts which must be periodically replaced. Contract with distributors or dealers for maintenance.

#### Adjusting the level

- Keep this machine horizontal.

#### Handling of cleaning solution

- Be sure to store the cleaning solution in a cold and dark place. Store the cleaning solution in a place that is out of the reach of children.

#### Warning labels

- Warning labels are adhered on this machine.
  Be sure to fully understand the warnings given on the labels. In the case where any of the warning label has become so soiled that the warning message is illegible or has come off, purchase a new one from your local distributor or our office.

#### Handling the antifreeze liquid

- Be sure to store the antifreeze liquid in a cold and dark place.
- Store the antifreeze liquid in a place that is out of the reach of children.

#### Ink cartridges

- If the ink cartridge is moved from a cold place to a warm place, leave it in a place of use for three hours or more and use it.
- Open the ink cartridge just before installing. Leaving it open for a long time will cause abnormal printing.
- Be sure to store ink cartridges in a cold and dark place.
- Once the ink opened, be sure to use ink up early. The ink passed for a long time after opening the cartridge will lower the printing quality.

- Using other than exclusive ink will break this machine. In this case, repairing of this machine is your responsibility.
- Never refill the ink cartridge with ink.
- Do not pound the ink cartridge nor shake it violently. If so, ink may leak out of the cartridge.

#### UV light

- A little UV light spills around the LED UV unit. UV light applied to your skin might cause inflammation and/or skin cancer.
  Even weak UV light causing no inflammation may lead to chronic disorders by repeated exposure. Avoid applying UV light to your skin and eyes.



- Impairment of eyes caused by UV light may be acute disorders, pain in eyes, tearing, chronic disorders, cataract, etc.
  When using this machine, protect your body such as gloves, long-sleeve cloth, light-resistant mask, attached light-resistant glasses, etc.

#### Hot parts

- The LED UV and the interior of the UV irradiation device will have a very high temperature. When carrying out maintenance, wait until the temperature has been sufficiently lowered after the lamp is turned OFF.



- When it is unavoidable to touch hot parts, be sure to wear heat-insulating gloves to protect your hands.

## ⚠ CAUTION

### Notes on LED UV

- When handling the glass on the bottom of the LED UV unit, be sure to wear the gloves attached and never touch them with bare hands. Or the UV ink curing level may significantly lower. If the glass becomes dirty, wipe it with clean gauze moistened with alcohol. (Do not use alcohol for cleaning the exterior cover, or the paint will peel off.)
- The LED UV performance and service life are significantly affected by the UV irradiation and UV power supply units used. Never use those UV devices other than those recommended by Mimaki. We would take no responsibility for any troubles caused through the use of a UV devices not recommended by Mimaki.

### Cleaning

- After using this machine long time, foreign materials and dust may be gathered on the conductive and insulating parts, causing electric leakage. Periodically clean such parts.
- For cleaning, do not use compressed air because it scatters foreign materials and dust, which may cause malfunctions when put inside the conductive parts. Be sure to use vacuum cleaner to vacuum off foreign materials and dust.
- Do not use the machine in a place where there is a possibility of being wet, or electricity may leak.
- Electrical leakage may lead to electrical shock of personnel or fire.
- To prevent accidents, be sure to carry out periodic inspections and replace periodic replacement parts.

### Firing and smoking

- Touching hot parts such as the LED UV with combustible materials may cause firing and/or smoking.
  Leaving combustible materials under the LED UV unit for a couple of minutes may also cause firing and/or smoking.
- After this machine is used long time, foreign materials or dust gathered may cause electrical leakage, or insulation deterioration may cause firing and/or smoking. Periodically clean this machine and replace the deteriorated parts after the insulation resistance.
- After this machine is used long time, screws or others on the conductive parts may be loosened, causing firing and/or smoking. Periodically tighten the screws.
- If abnormalities such as a strange odor, a smoking or a spark burn occurred, turn the power off and call our office immediately.

## Precautions for installation

| CAUTION | | |
|---|---|---|
| **A place exposed to direct sunlight** | **A place that is not horizontal** | **A place where temperature and humidity varies significantly** |
| 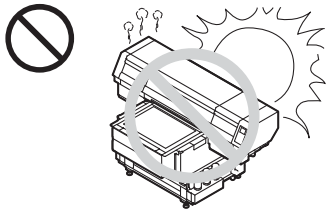 | 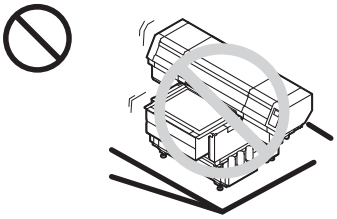 | •Use the machine under the following environment.<br>Operating environment :<br>20 to 30 °C (68 to 90 °F)<br>35 to 65% (Rh) |
| **A place that vibrates** | **A place exposed to direct air blow from air conditioner, etc.** | **Around a place where fire is used** |
| 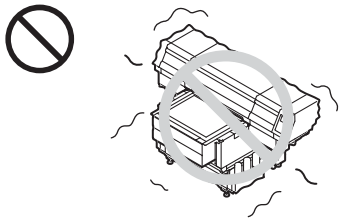 | 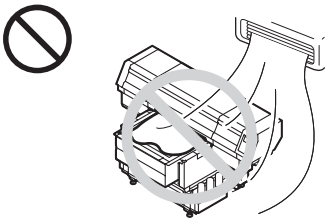 | 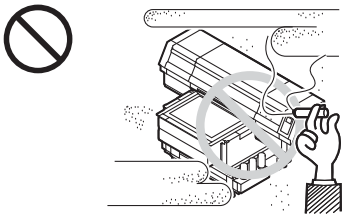 |

## Position of the warning label

Warning labels are adhered on Kebab MkII system/Kebab MkII L system. Be sure to fully understand the warnings given on the labels.

In the case where any of the warning label has become so soiled that the warning message is illegible or has come off, purchase a new one from your local distributor or our office.




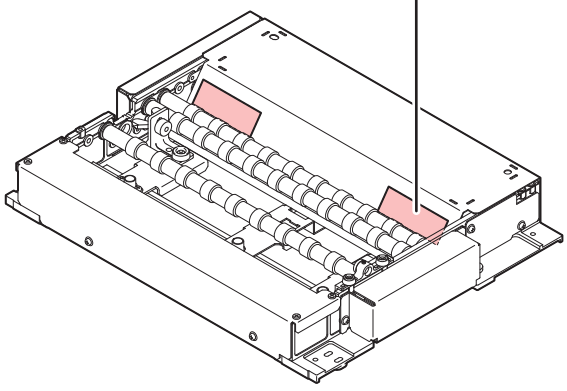

[ Kebab MkII system ]

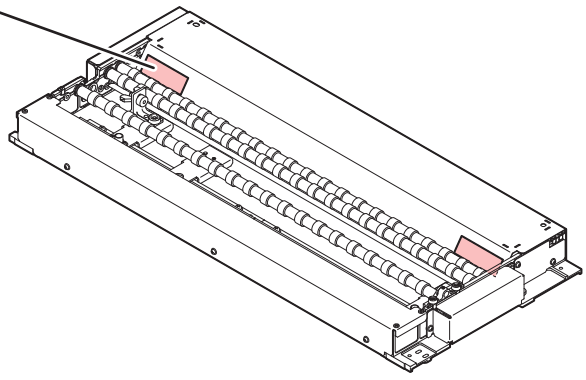

[ Kebab MkII L system ]

# Configuration and Function

## Front view of Kebab MkII system

Roller shaft

Shaft to rotate the work by putting the work between two on either of the front or the back.

Test drawing area

When you install Kebab MkII system on absorbing table, you can perform test drawing in this area.

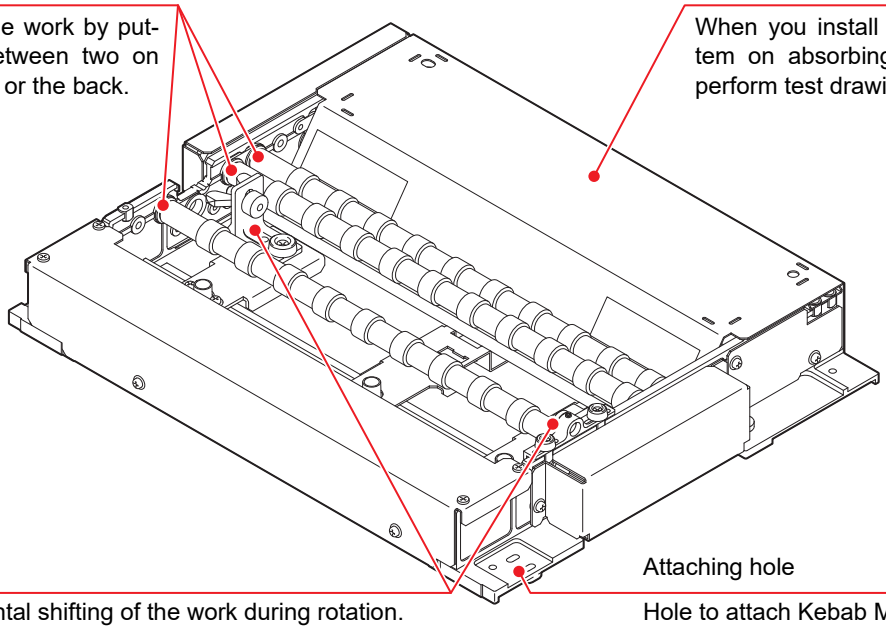

Work holder

Curbs the horizontal shifting of the work during rotation.
You can use it for a work with a large diameter.
Remove it when using a work with a small diameter.

Attaching hole

Hole to attach Kebab MkII system into.
It is also on the opposite side.

## Rear view of Kebab MkII system

Origin position mark sensor

Reads the origin position mark attached to the work when detecting the origin position mark.
You can move it from side to side.

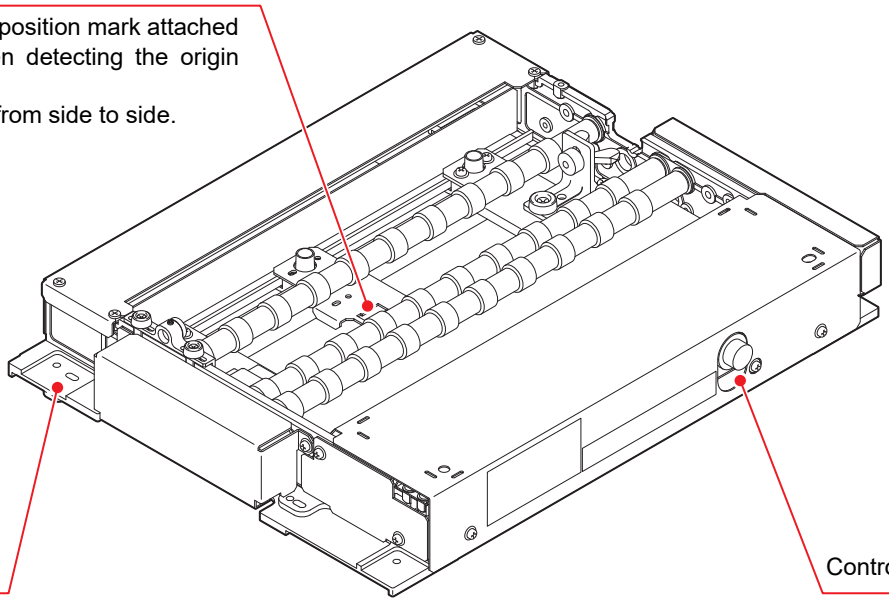

Attaching hole

Hole to attach Kebab MkII system into.
It is also on the opposite side.

Control connector

Connected with the printer by the option relay cable.

## Front view of Kebab MkII L system

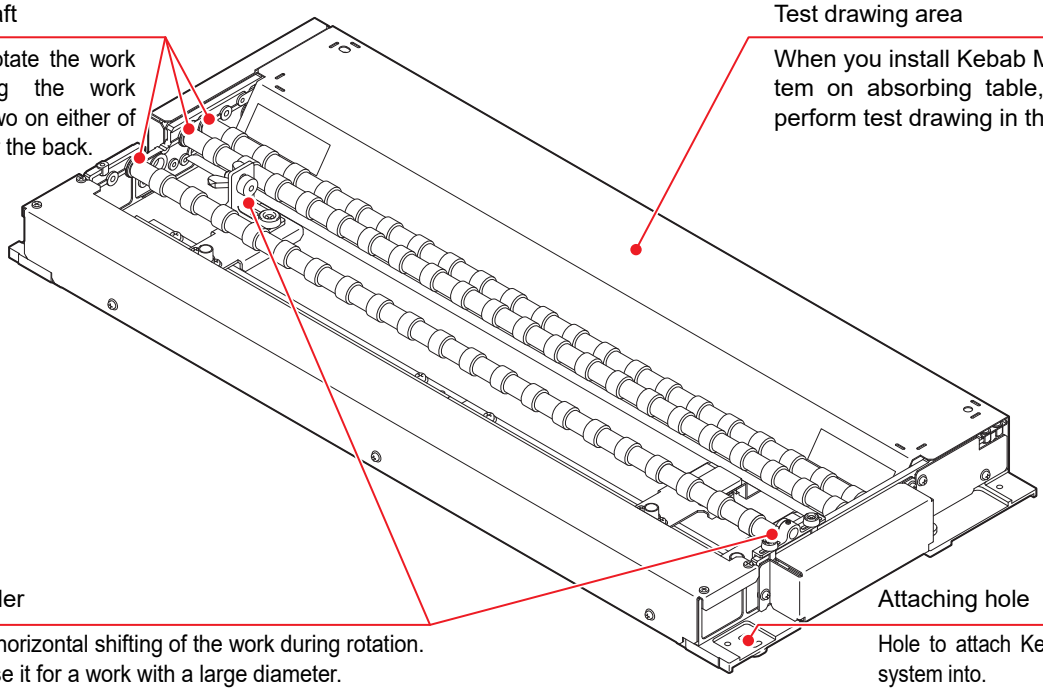

Roller shaft

Shaft to rotate the work by putting the work between two on either of the front or the back.

Test drawing area

When you install Kebab MkII L system on absorbing table, you can perform test drawing in this area.

Work holder

Curbs the horizontal shifting of the work during rotation.
You can use it for a work with a large diameter.
Remove it when using a work with a small diameter.

Attaching hole

Hole to attach Kebab MkII L system into.
It is also on the opposite side.

## Rear view of Kebab MkII L system

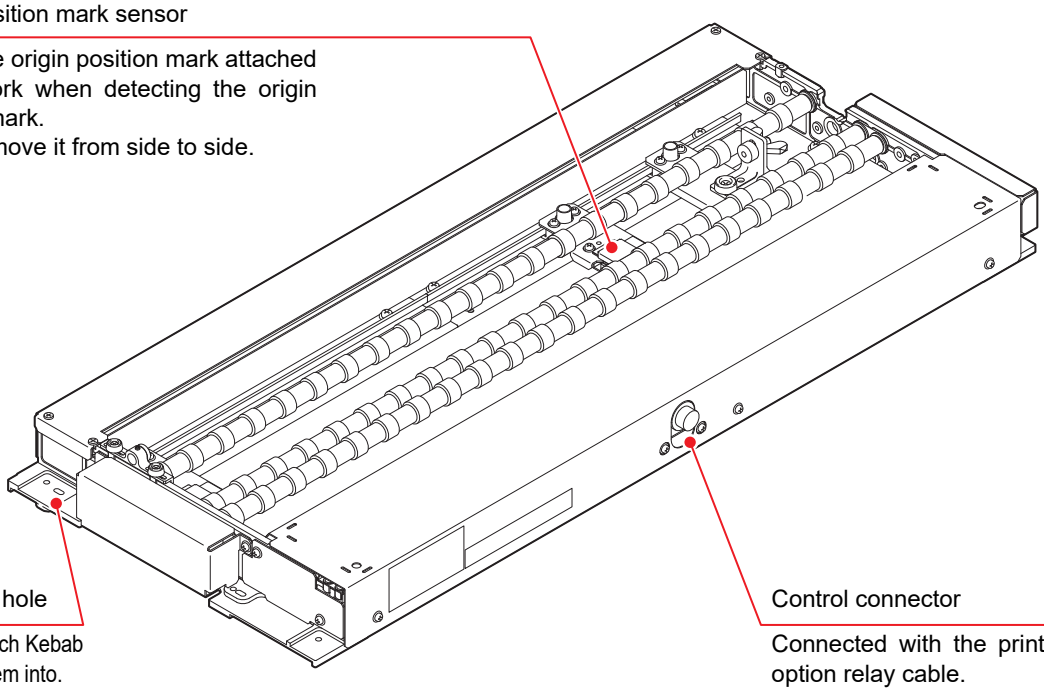

Origin position mark sensor

Reads the origin position mark attached to the work when detecting the origin position mark.
You can move it from side to side.

Attaching hole

Hole to attach Kebab MkII L system into.
It is also on the opposite side.

Control connector

Connected with the printer by the option relay cable.

# Usable works

| | | Kebab MkII system | Kebab MkII L system |
|---|---|---|---|
| **Shape** | | Cylinder | |
| **Length** | **Maximum** | 300 mm | 600 mm |
| | **Minimum** | 30 mm | 30 mm |
| **Diameter** | **Maximum** | 110 mm | 110 mm |
| | **Minimum** | 10 mm | 10 mm |
| **Max. printing width** | | 300 mm | 600 mm |
| **Usable work weight** | | Small diameter : no more than 1.5 kg,<br>Large diameter : no more than 2.0 kg | |

Important!

- The surface material, and unevenness, weight, etc. of the work may have an effect when drawing, such as by causing the drawing itself to deviate from its position and color irregularities when drawing by overprinting multiple times.
- Make sure you perform test printing beforehand to check if there is no problem with drawing.

# Installation of Kebab MkII system

## Attach Kebab MkII/Kebab MkII L system

Each of Kebab MkII/Kebab MkII L system is usable for the following printers respectively.

| Device Name | Corresponding Printer |
|---|---|
| Kebab MkII | UJF-3042MkII, UJF-3042MkII EX, UJF-3042MkIIe, UJF-3042MkIIe EX, UJF200-3042 |
| Kebab MkII L | UJF-6042MkII, UJF-6042MkIIe, UJF200-6042 |
| | UJF-7151 plus, UJF-7151plusII |

## Attach Kebab MkII system on UJF-3042MkIIseries,UJF200-3042

When installing the Kebab MkII system, please follow these instructions.

### 1 Turn OFF the main power of the printer main unit.(For the UJF200, there is no need to turn off the main power.)

### 2 Open the front cover.

- For the UJF200, after opening the front cover, proceed to Step 5.

### 3 Remove the table by lifting up.

Important!

- Lift the table vertically by holding its both edges.

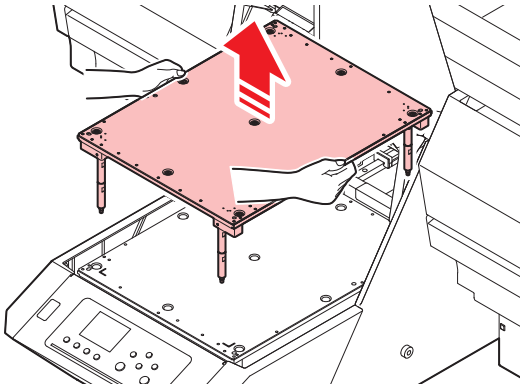

### 4 Depending on the diameter of the work, use the sustaining shaft of the number shown in the table.

| Diameter of work to use | Number of sustaining shaft |
|---|---|
| more than 10 mm and less than 65 mm | 1 pc |
| 65mm ~ 110mm | 0 pc |

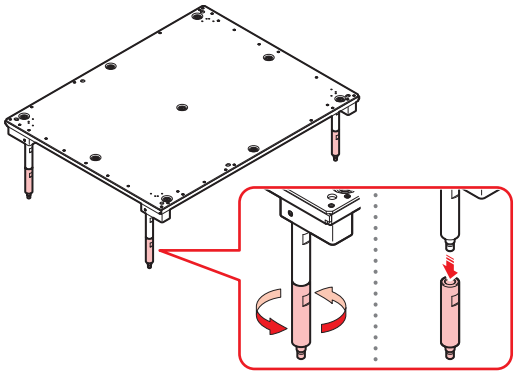

## 5 Remove the connector panel K shown at the center of printer.

- For the UJF200, remove the round connector cap and proceed to step 8.

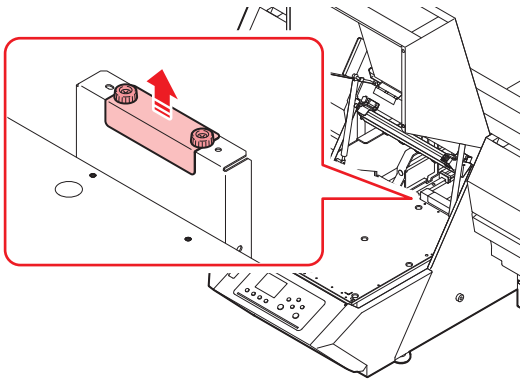

## 6 Attach the table that was removed.

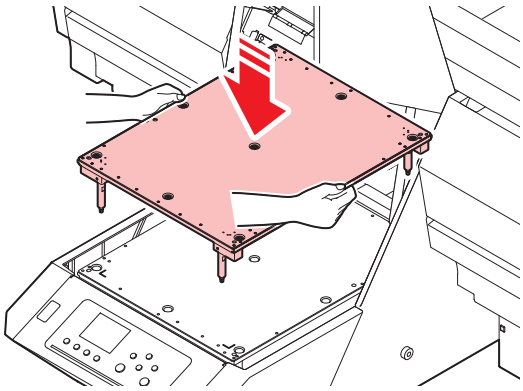

## 7 Turn ON the main power and the power of printer.

## 8 Press the MENU key in the local mode.

| | |
|---|---|
| MENU | 1 / 3 |
| WORK SET | > |

## 9 Press ▲ ▼ to select [Environment Setting] for the UJF200 or [MACHINE SETUP] for other models, and then press the ENTER key.

| | |
|---|---|
| MENU | 2 / 3 |
| MACHINE SETUP | > |

## 10 Press ▲ ▼ to select [SET OPTION JIG].

| | |
|---|---|
| MACHINE SETUP | 2 / 2 |
| SET OPTION JIG | > |

## 11 Press the ENTER key.

- For the UJF200, the table moves up. For other models, the table moves down.

| | |
|---|---|
| HEAD HEIGHT | |
| END | :ent |

Important!

- When you press the ENTER key, “END [ent]” is displayed on the screen. Do not press the ENTER key until the work up to the Step 15 has been completed. If you press the ENTER key before the replacing work has been completed, printer starts Kebab MkII system automatic recognition operation.

# 12 Attach the Kebab MkII system.

- Attach the Kebab MkII system on UJF-3042MkIIseries, UJF200-3042.

(1) Attach the K positioner BKT_R in the right front corner of the table using a provided plastic knob screw.

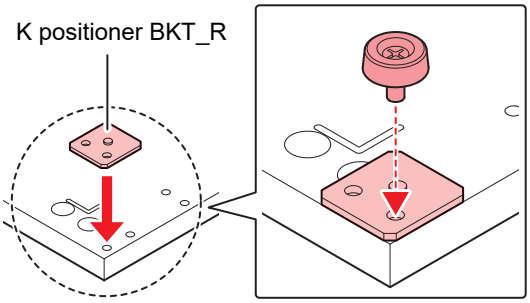


(2) Attach the K positioner BKT_R in the left front corner of the table using a provided plastic knob screw.

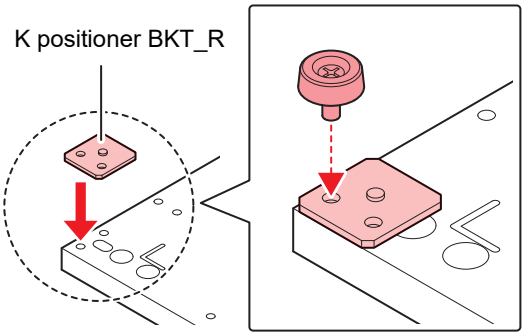


(3) Attach the cable BKT in the back of table.

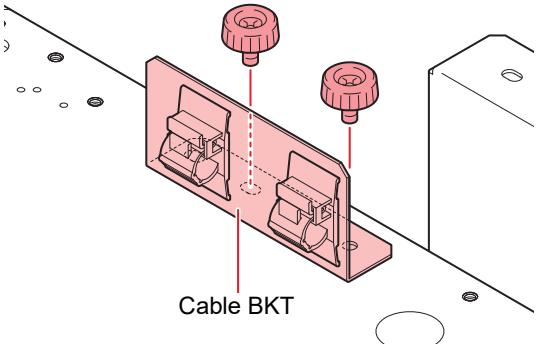


(4) Place the Kebab MkII system on the table.

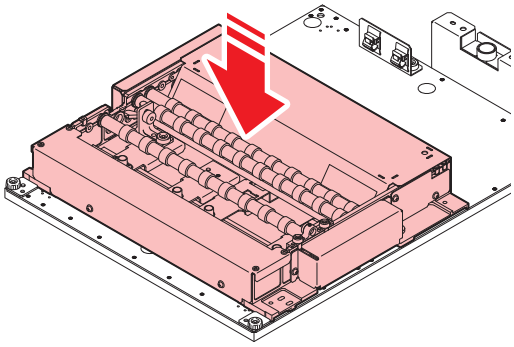

(5) Fix the Kebab MkII system into place with a plastic knob screw while pressing it into the K positioner BKT_R (L) side.

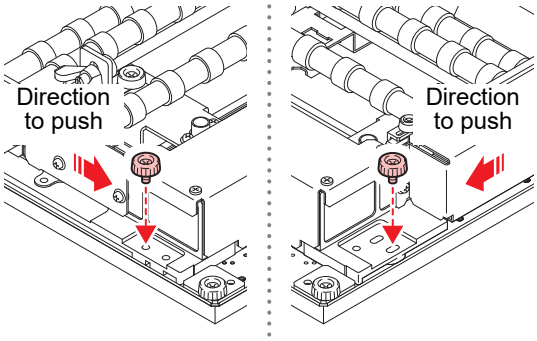


Important!

- Check that there is no gap between Kebab MkII system and the table.
- If there is gap, perform the procedures below:
  Lightly push Kebab MkII system into from above.
  Check that there is no dust etc. on the UJF-3042MkIIseries, UJF200-3042 table.
  Check that no dust adheres to the rear surface of Kebab MkII system.

## 13 Insert the option relay cable into the connector on the printer.

- Surely insert the cable to prevent printer from coming off during the operation.

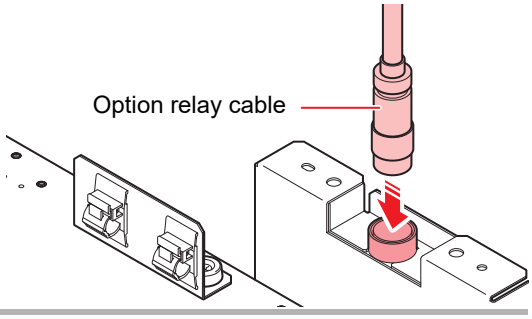


## 14 Insert the option relay cable into the connector on the rear surface of Kebab MkII system.

- Surely insert the cable to prevent printer from coming off during the operation.

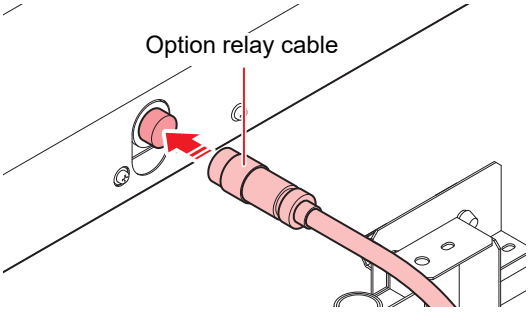


## 15 Fix the option relay cable with the clamps.

- Fix the option relay cable with the clamp attached in the cable BKT.

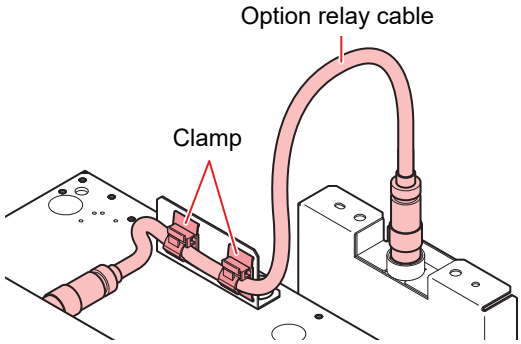


## 16 Press the ENTER key.

- Printer performs Kebab MkII system automatic recognition operation.



## Remove the Kebab MkII system from UJF-3042MkIIseries, UJF200-3042

When you draw the work with different diameter from the one you drew until then, it may be required to remove Kebab MkII system once and reattach it on the table depending on the diameter. (For the UJF-3042MkII series)

When removing Kebab MkII system, follow the procedures below:

**1** **For the UJF200, without turning off the power, select [Environment Setting ] > [SET OPTION JIG] in Local Mode and press the ENTER key. For other models, turn off the printer's main power.**

**2** **Open the front cover.**

**3** **Remove the clamp fixing the option relay cable.**

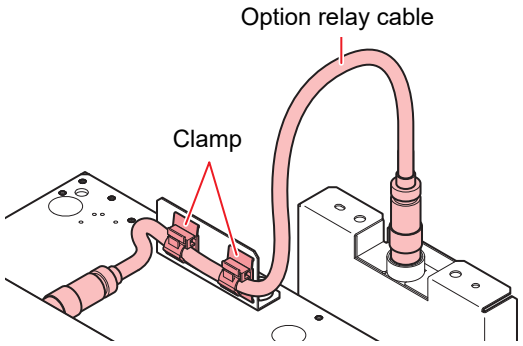


**4** **Remove the option relay cable from the printer main unit.**

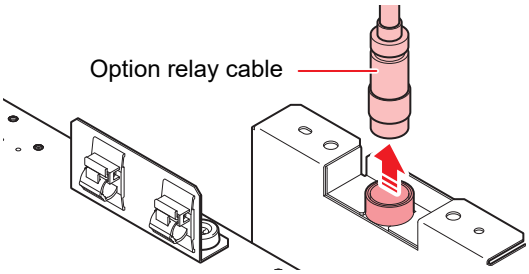


**5** **Remove the option relay cable from the rear surface of Kebab MkII system.**

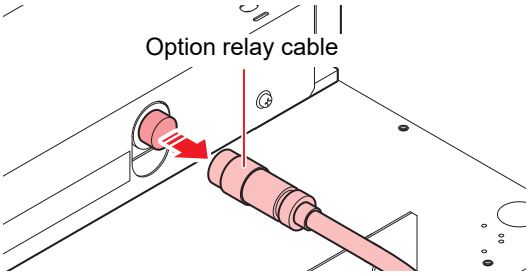

## 6 Remove the plastic knob screw fixing Kebab MkII and remove Kebab MkII system.

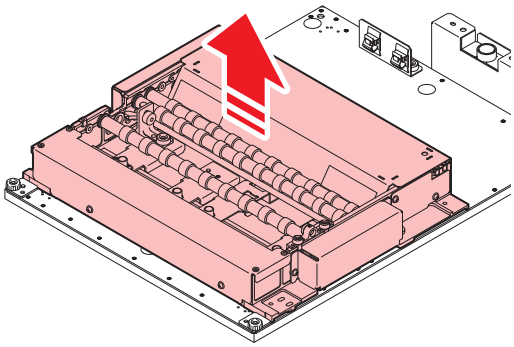

## 7 Remove the cable BKT.

- For the UJF200, proceed to Step 10.

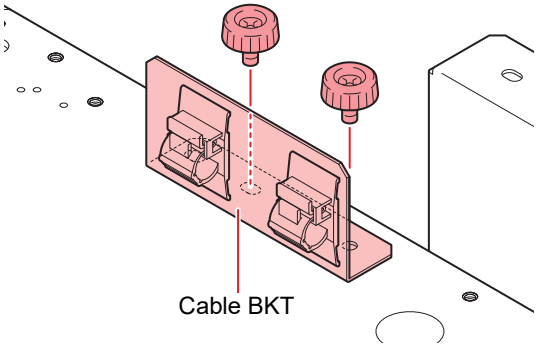


## 8 Remove the table by lifting up.

Important!

- Lift the table vertically by holding its both edges.

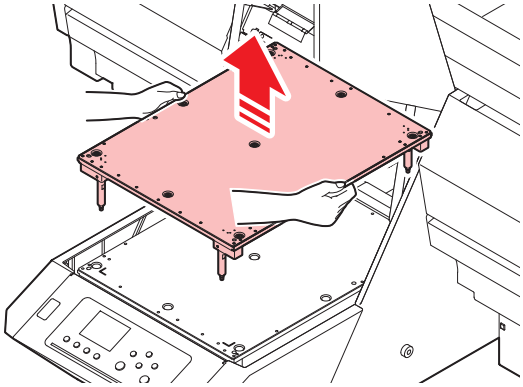

## 9 Depending on a purpose, use the sustaining shaft of the number shown in the table.

- After adjusting the number of sustaining shaft, In case that the purpose is (1) or (2), Move to the step 10 of the section “Attach Kebab MkII system to UJF-3042MkIIseries”.
- In case that the purpose is (3), Move to the step 10 in this section.

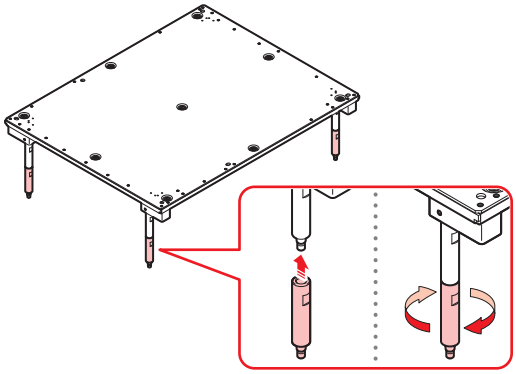

| Purpose | Number of sustaining shaft |
|---|---|
| (1) Change the work to the one of diameter more than 10 mm and less than 65 mm. | 1 pc |
| (2) Change the work to the one of diameter more than 65 mm and less than 110 mm. | 0 pc |
| (3) Remove Kebab MkII system. | 2 pc |

## 10 Attach the connector panel K in the center of printer.

- For the UJF200, attach the round connector cap and proceed to step 12.

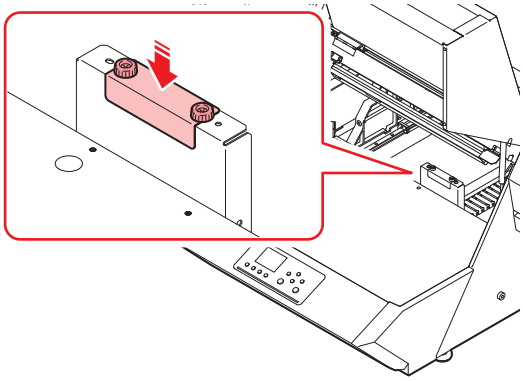

## 11 Attach the table that was removed.

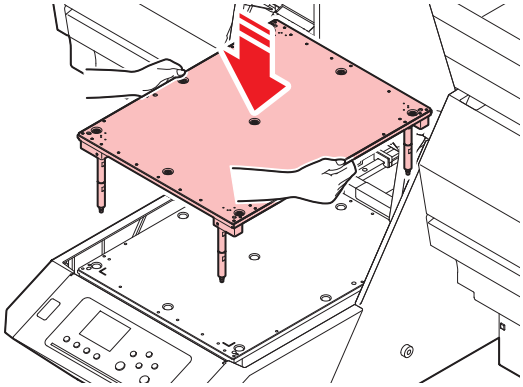

## 12 Remove the K positioner BKT_R (x2) at the both front edges of table.

- The UJF200 is not equipped with the support shaft shown in the figure.

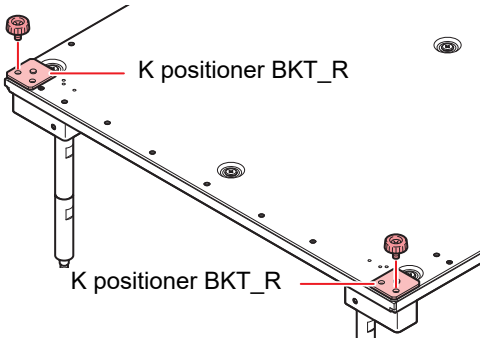


## 13 Close the front cover.

## 14 For the UJF200, select [SET OPTION JIG] > [Completed :ent ] and press the ENTER key. (The removal is automatically detected.) For other models, turn on the printer's power.

## Attach Kebab MkII L system on UJF-6042MkIIseries, UJF200-6042

When installing the Kebab MkII L system, please follow these instructions.

### 1 Turn OFF the main power of the printer main unit. (For the UJF200, there is no need to turn off the main power.)

### 2 Open the front cover.

- For the UJF-200, after opening the front cover, proceed to Step 6.

### 3 Pull out the cable under the table from the printer main unit.

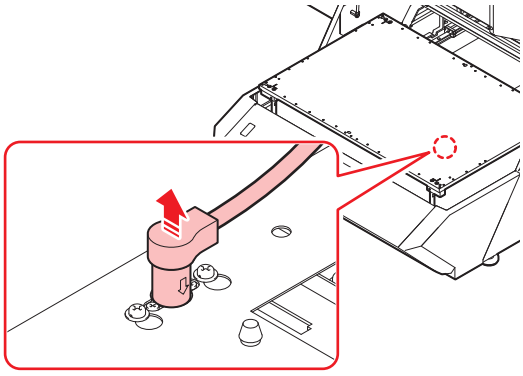

### 4 Remove the table by lifting up.

Important!

- Lift the table vertically by holding its both edges.

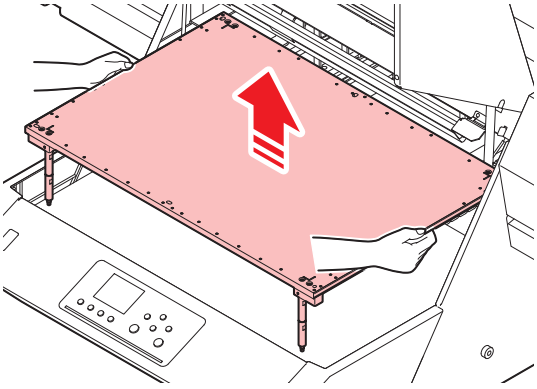

### 5 Depending on the diameter of the work, use the sustaining shaft of the number shown in the table.

| Diameter of work to use | Number of sustaining shaft |
|---|---|
| more than 10 mm and less than 65 mm | 1 pc |
| 65mm ~ 110mm | 0 pc |

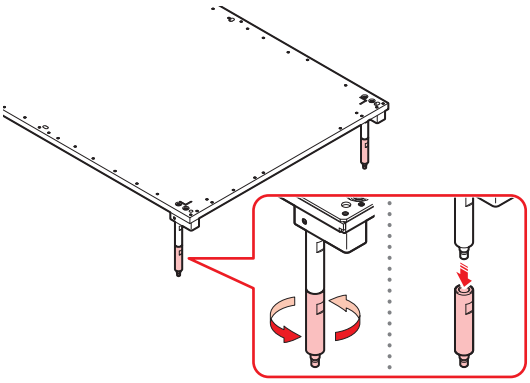

## 6 Remove the connector panel K shown at the center of printer.

- For the UJF200, remove the round connector cap and proceed to step 10.

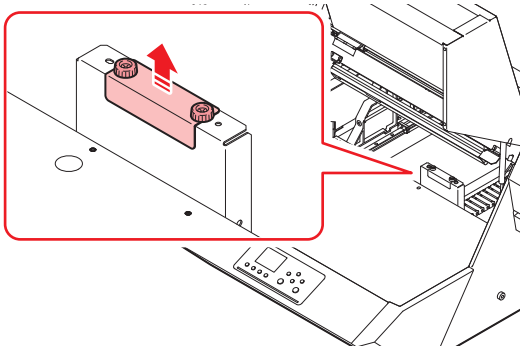

## 7 Attach the table that was removed.

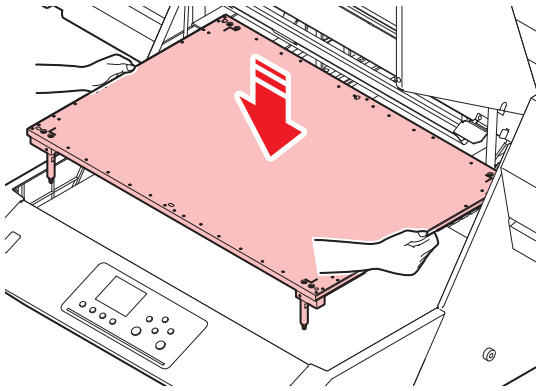

## 8 Put the cable under the table into the printer main unit.

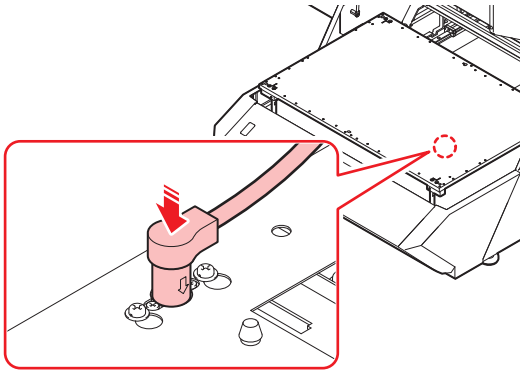

## 9 Turn ON the main power and the power of printer.

## 10 Press the MENU key in the local mode.




## 11 Press ▲ ▼ to select [Environment Setting] for the UJF200 or [MACHINE SETUP] for other models, and then press the ENTER key.




## 12 Press ▲ ▼ to select [SET OPTION JIG].



# 13 Press the ENTER key.




- For the UJF200, the table moves up. For other models, the table moves down.

Important!

- When you press the ENTER key, “END [ent]” is displayed on the screen. Do not press the ENTER key until the work up to the Step 17 has been completed. If you press the ENTER key before the replacing work has been completed, printer starts Kebab MkII L system automatic recognition operation.

# 14 Attach the Kebab MkII L system.

- Attach the Kebab MkII L system on UJF-6042MkIIseries, UJF200-6042.

(1) Attach the K positioner BKT_R in the right front corner of the table using a provided plastic knob screw.

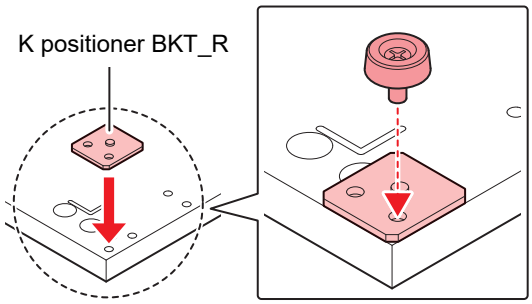


(2) Attach the K positioner BKT_R in the left front corner of the table using a provided plastic knob screw.

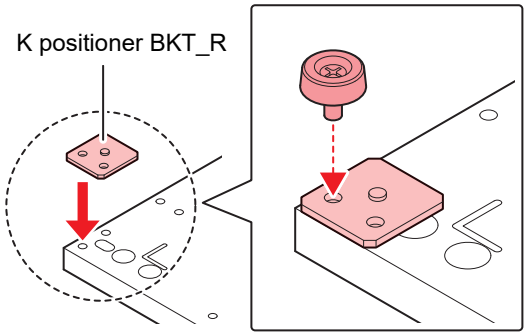


(3) Attach the cable BKT in the back of table.

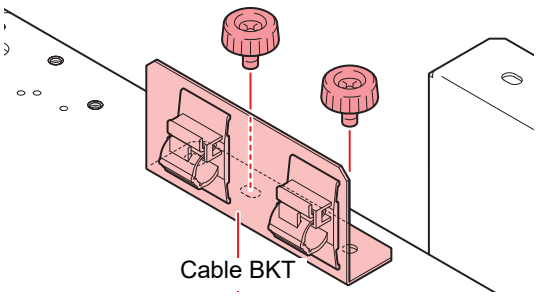


(4) Place the Kebab MkII L system on the table.

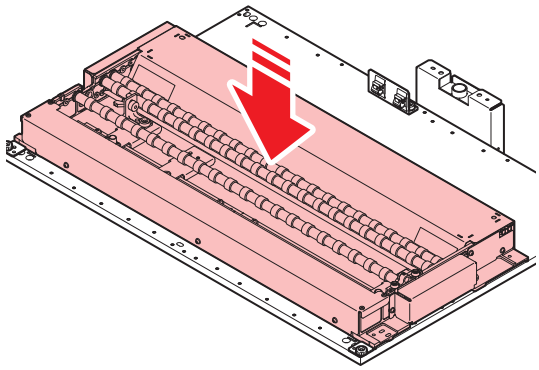

(5) Fix the Kebab MkII L system into place with a plastic knob screw while pressing it into the K positioner BKT_R (L) side.

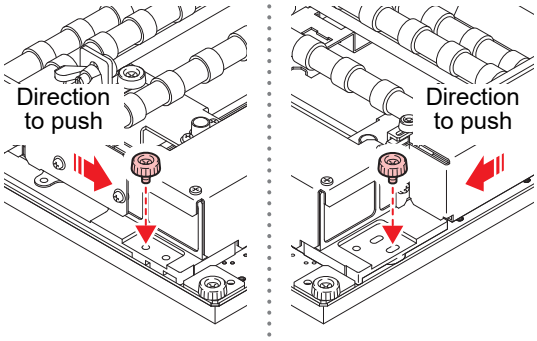


Important!

- Check that there is no gap between Kebab MkII L system and the table.
- If there is gap, perform the procedures below:
  Lightly push Kebab MkII L system into from above.
  Check that there is no dust etc. on the UJF-6042MkIIseries, UJF200-6042 table.
  Check that no dust adheres to the rear surface of Kebab MkII L system.

## 15 Insert the option relay cable into the connector on the printer.

- Surely insert the cable to prevent printer from coming off during the operation.

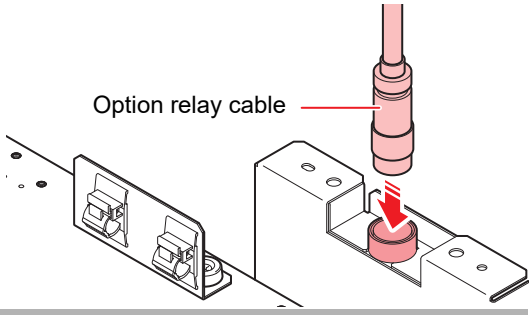


## 16 Insert the option relay cable into the connector on the rear surface of Kebab MkII L system.

- Surely insert the cable to prevent printer from coming off during the operation.

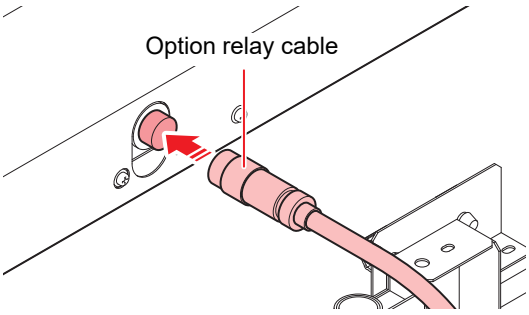


## 17 Fix the option relay cable with the clamps.

- Fix the option relay cable with the clamp attached in the cable BKT.

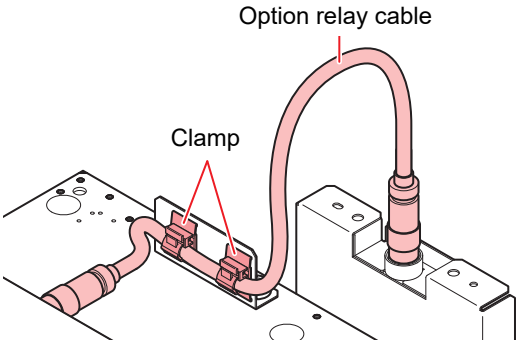


## 18 Press the ENTER key.

- Printer performs Kebab MkII L system automatic recognition operation.

```
SET OPTION JIG
Jig   :Kebab MkII L
```

## Remove the Kebab MkII L system from UJF-6042MkIIseries, UJF200-6042

When you draw the work with different diameter from the one you drew until then, it may be required to remove Kebab MkII L system once and reattach it on the table depending on the diameter. (For the UJF-6042MkII series)

When removing Kebab MkII L system, follow the procedures below:

**1** **For the UJF200, without turning off the power, select [Environment Setting] > [SET OPTION JIG] in Local Mode and press the ENTER key. For other models, turn off the printer's main power.**

**2** **Open the front cover.**

**3** **Remove the clamp fixing the option relay cable**

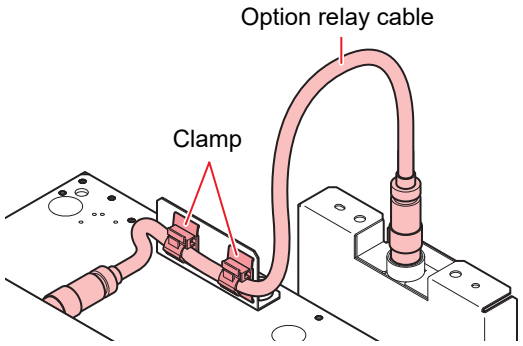


**4** **Remove the option relay cable from the printer main unit.**

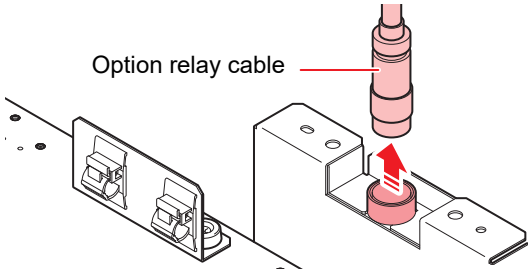


**5** **Remove the option relay cable from the rear surface of Kebab MkII system.**

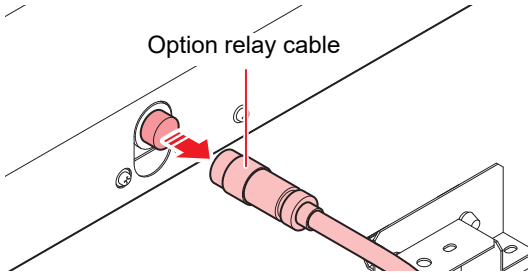

## 6 Remove the plastic knob screw fixing Kebab MkII L and remove Kebab MkII L system.

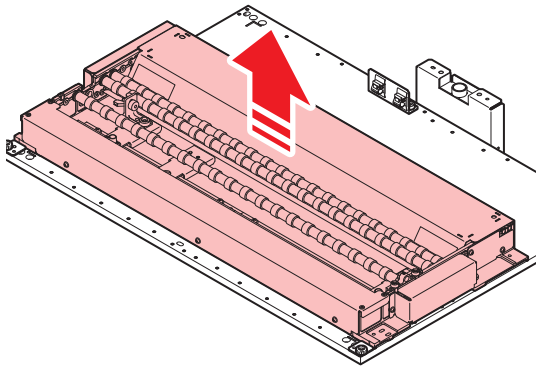

## 7 Remove the cable BKT.

- For the UJF-200, proceed to Step 11.

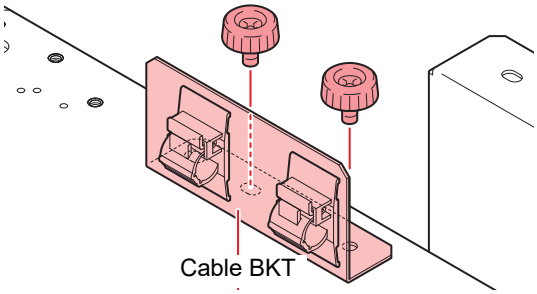


## 8 Pull out the cable under the table from the printer main unit.

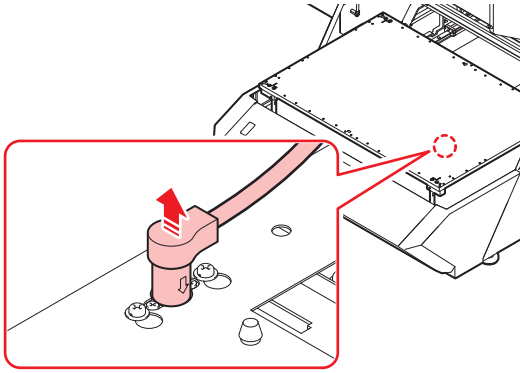

## 9 Remove the table by lifting up.

Important!

- Lift the table vertically by holding its both edges.

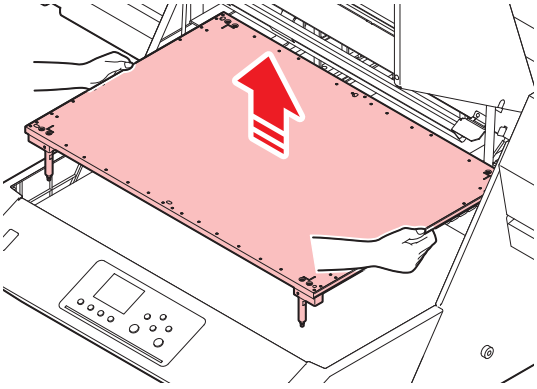

## 10 Depending on a purpose, use the sustaining shaft of the number shown in the table.

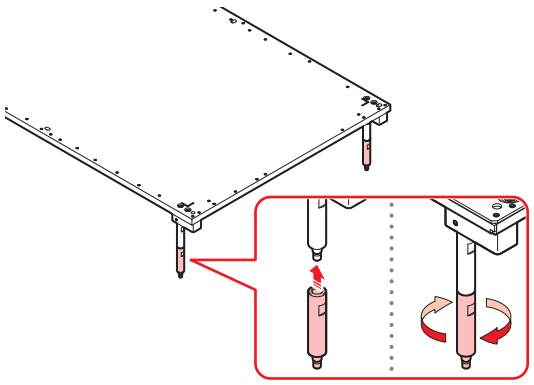

- After adjusting the number of sustaining shaft,
  In case that the purpose is (1) or (2),
  Move to the step 7 of the section “Attach Kebab MkII L system to UJF-6042MkIIseries”.
- In case that the purpose is (3),
  Move to the step 11 in this section.

| Purpose | Number of sustaining shaft |
|---|---|
| (1) Change the work to the one of diameter more than 10 mm and less than 65 mm. | 1 pc |
| (2) Change the work to the one of diameter more than 65 mm and less than 110 mm. | 0 pc |
| (3) Remove Kebab MkII L system. | 2 pc |

## 11 Attach the connector panel K in the center of printer.

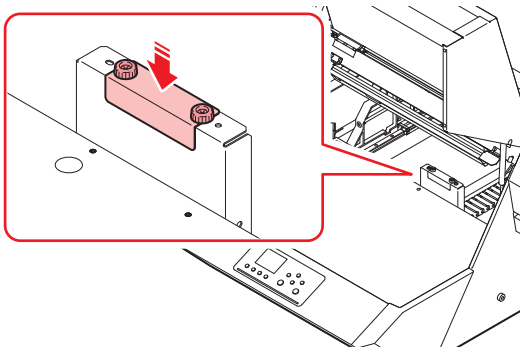

- For the UJF200, attach the round connector cap and proceed to step 14.

## 12 Attach the table that was removed.

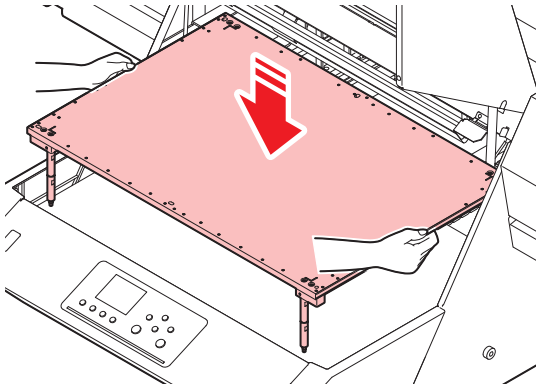

## 13 Put the cable under the table into the printer main unit.

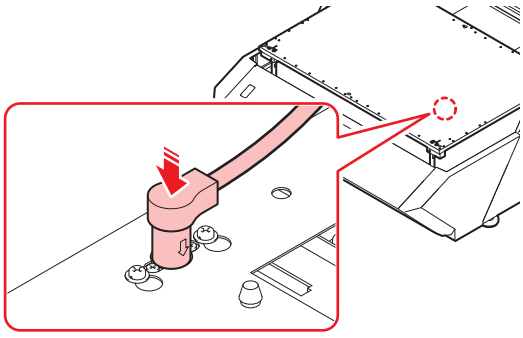

## 14 Remove the K positioner BKT_R (x2) at the both front edges of table.

- The UJF-200 is not equipped with the support shaft shown in the figure.

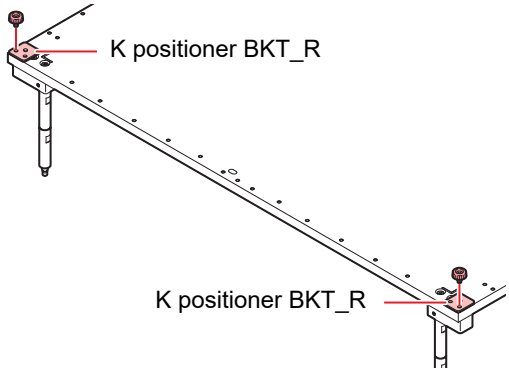


## 15 Close the front cover.

## 16 For the UJF200, select [SET OPTION JIG] > [Completed :ent ] and press the ENTER key. (The removal is automatically detected.) For other models, turn on the printer's power.

# Attach Kebab MkII L system on UJF-7151 plus series

When installing the Kebab MkII L system, please follow these instructions.

## 1 Press the MENU key in the local mode.




## 2 Press the ENTER key in the [MACHINE SETUP] page.

## 3 Press ▲ ▼ to select [SET OPTION JIG].

## 4 Press the ENTER key.

- The table goes down.

Important!

- When you press the ENTER key, “COMPLETED [ent]” is displayed on the screen. Do not press the ENTER key until the work up to the Step 8 has been completed. If you press the ENTER key before the replacing work has been completed, printer starts Kebab MkII L system automatic recognition operation.

## 5 Remove the X connector cover.

- Remove the screws seen in the table front and remove the X connector cover.

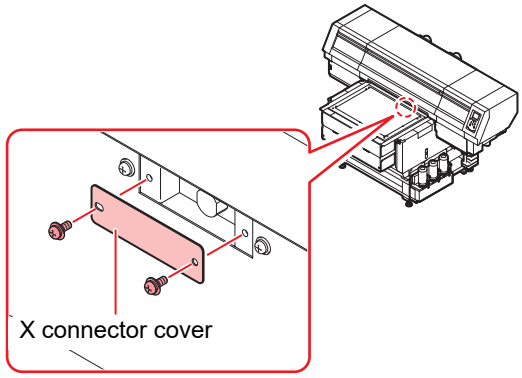


## 6 Attach the Kebab MkII L system.

- Attach the Kebab MkII L system on UJF-7151 plus series.

(1) Attach the K positioner BKT_R in the right front corner of the table using a provided plastic knob screw.

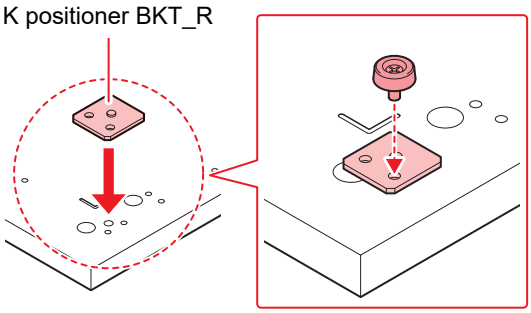

(2) Attach the K positioner BKT_for 7151 in the left front corner of the table using a provided plastic knob screw.

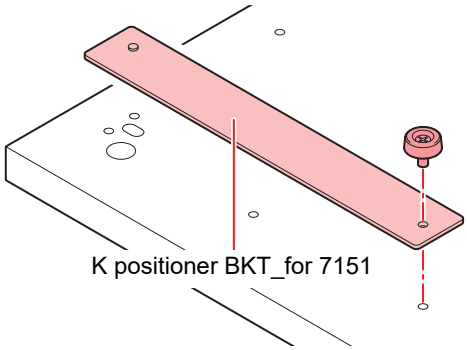


(3) Place the Kebab MkII L system on the table.

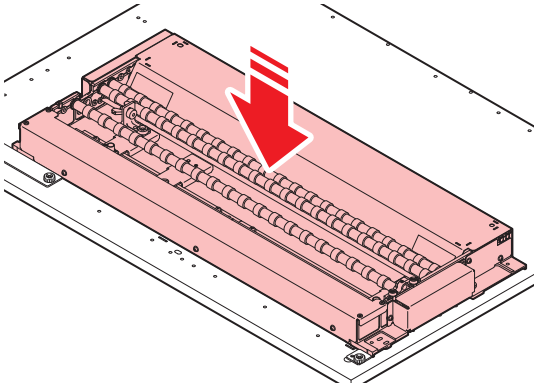

(4) Fix the Kebab MkII L system into place with a plastic knob screw while pressing it into the K positioner BKT_R side.

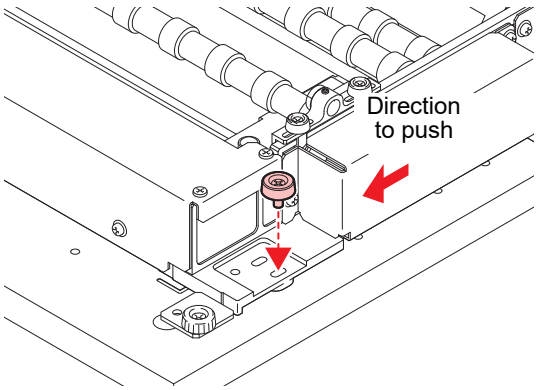


Important!

- Check that there is no gap between Kebab MkII L system and the table.
- If there is gap, perform the procedures below:
  Lightly push Kebab MkII L system into from above.
  Check that there is no dust etc. on the UJF-7151 plus series table.
  Check that no dust adheres to the rear surface of Kebab MkII L system.

## 7 Insert the option relay cable into the connector on the printer.

- Surely insert the cable to prevent printer from coming off during the operation.

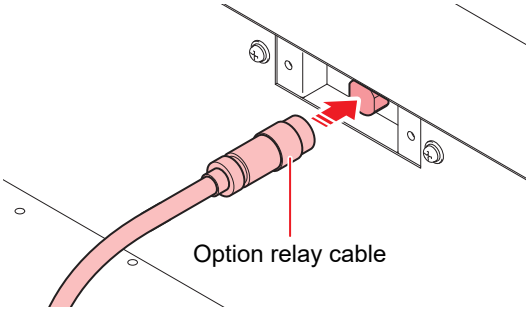

## 8 Insert the option relay cable into the connector on the rear surface of Kebab MkII L system.

- Surely insert the cable to prevent printer from coming off during the operation.

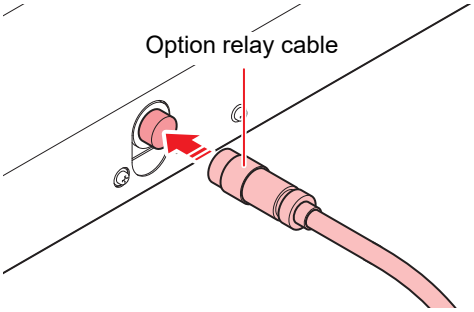


## 9 Press the ENTER key.

- Printer performs Kebab MkII L system automatic recognition operation.

```
SET OPTION JIG
Jig   :Kebab MkII L
```

## Remove the Kebab MkII L system from UJF-7151 plus series

When removing Kebab MkII L system, follow the procedures below:

**1** **Press the (MENU) key in the local mode.**




**2** **Press the (ENTER) key in the [MACHINE SETUP] page.**




**3** **Press (▲) (▼) to select [SET OPTION JIG].**




**4** **Press the (ENTER) key.**

- The table goes down.




Important!

- When you press the (ENTER) key, “COMPLETED [ent]” is displayed on the screen. Do not press the (ENTER) key until the work up to the Step 6 has been completed. If you press the (ENTER) key before the replacing work has been completed, printer starts Kebab MkII L system automatic recognition operation.

**5** **Remove the option relay cable from the printer main unit.**

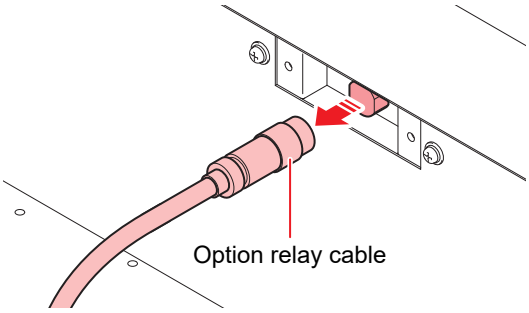


**6** **Remove the option relay cable from the rear surface of Kebab MkII system.**

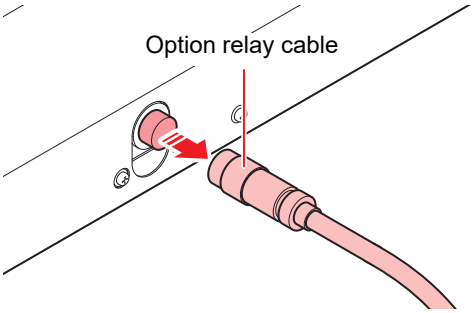

## 7 Attach the X connector cover.

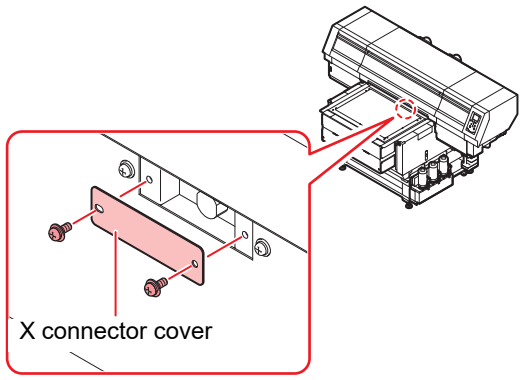


## 8 Remove the plastic knob screw fixing Kebab MkII L and remove Kebab MkII L system.

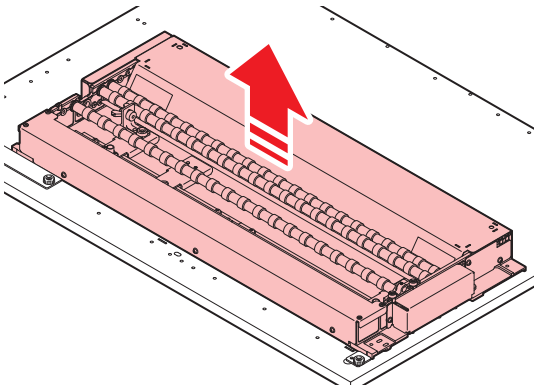

## 9 Remove the K positioner BKT_for 7151 at the left front of table.

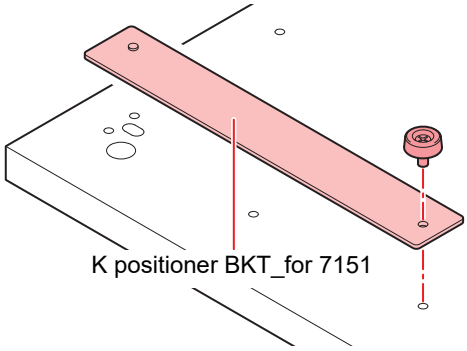


## 10 Remove the K positioner BKT_R at the right front of table.

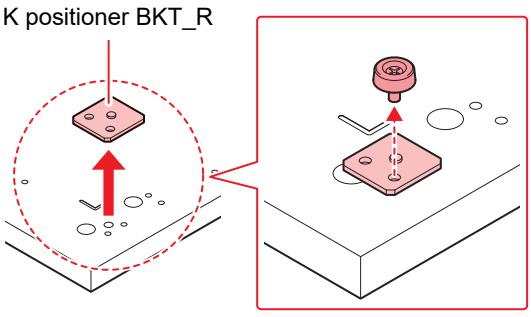


## 11 Press the ENTER key.

- Printer performs Kebab MkII L system automatic recognition operation.



# Set a work

## Set a work

Set the work on the jig.
For Kebab MkII system/Kebab MkII L system, you can set several works of same diameter at the same time.

### 1 Press the FUNC1 key in the local mode.

```
MENU                1/3
WORK SET             >
```

### 2 Press the ▲ ▼ to select [WORK SET].

```
MENU                1/3
WORK SET             >
```

### 3 Press the ENTER key.

- The table goes down.

### 4 Measure the diameter of the work to be drawn and input it.

```
WORK SET
DIAMETER =45.7mm
```

- Using a slide gauge, input the correct value.
- Range to input: 10.0 ~ 110.0 mm (☞ P.56)

### 5 Press the ENTER key.

- Depending on the work diameter, the position to which the work is set in Kebab MkII system/Kebab MkII L system (small diameter or large diameter) differs. As the position to set the work is displayed on the screen, set the work by following the display.

**[UJF-7151 plus series,UJF200-3042/6042]**

In case that diameter is less than 45.0mm

```
WORK SET
SET NARROW SPAN :ent
```

In case that diameter is more than 45.0mm

```
WORK SET
SET WIDE SPAN   :ent
```

**[UJF-30422MkIIseries/6042MkII]**

In case that diameter is less than 45.0mm

```
SET TABLE SPACER 50
SET NARROW SPAN :ent
```

If the diameter is more than 45.0mm and less than 65.0mm

```
SET TABLE SPACER 50
SET WIDE SPAN   :ent
```

In case that diameter is more than 65.0mm

```
NO TABLE SPACER
SET WIDE SPAN   :ent
```

- **Table for attaching work**

| Diameter of work | Less than 45mm | More than 45mm |
|---|---|---|
| Position to set work | Small diameter | Large diameter |

- In case of UJF-3042MkIIseries/6042MkIIseries use the sustaining shaft of the number shown in the table depending on the diameter of the work.

| Diameter of work to use | Number of sustaining shaft |
|---|---|
| more than 10 mm and less than 65 mm | 1 pc |
| 65mm ~ 110mm | 0 pc |

**Small diameter setting position**

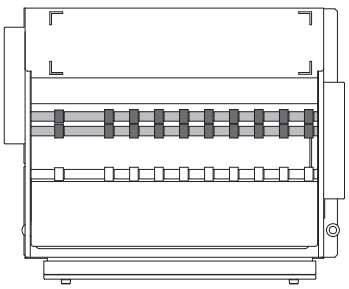

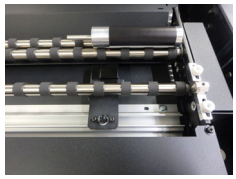

Example of small diameter setting

**Large diameter setting position**

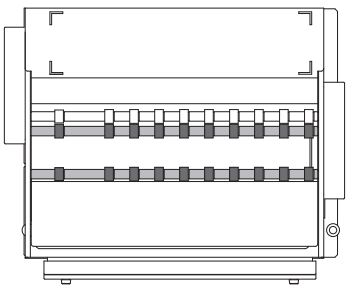

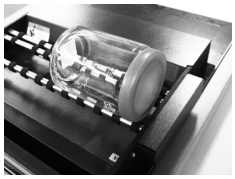

Example of large diameter setting

## 6 Set a work.

- Following the instruction on the screen, set a work at the small diameter/ the large diameter setting position.
- Set the work at the left side of the origin position mark on the bottom plate.
- When you need to draw several times to reduce the misalignment of drawing, use the “work holder” and perform “origin position mark detection”.
(☞ P.34, P.38)

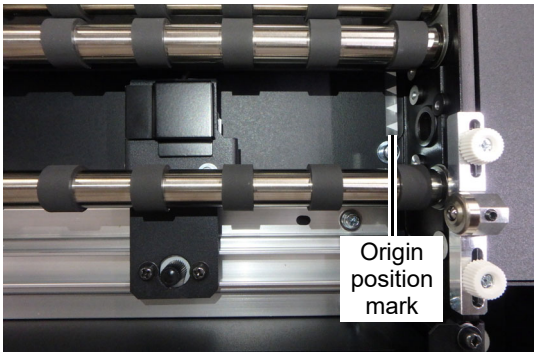


Important!

- When setting the work, make it may not touch the left/ the right side plate.
  If you draw with the work touching the side plate, the work cannot rotate correctly.
- When you draw the work with a small diameter, remove the work holder; otherwise the work holder and the slider may collide with each other.
(☞ P.37)

## 7 Press the ENTER key.

- The work is set and the machine returns to the LOCAL mode by the END/POWER key.
- Set the start position of the drawing when setting the drawing origin of the work on the printer. (☞ P.42)
- Detects the origin position mark when the detection function for the origin position mark is set to ON.

## Attention when using a work of the different diameter from the previously used work

When using Kebab MkII system/Kebab MkII L system with UJF-3042 MkII/ 6042 MkII, if the using work is changed as below, it is necessary to once remove Kebab MkII system/Kebab MkII L system and attach again after adjusting the number of table sustaining shaft.

| Change the diameter of work | Change the number of sustaining shaft |
|---|---|
| less than 65 mm → 65 mm or more | Change into 0 pc |
| 65 mm or more → less than 65 mm | Change into 1 pc |

• As for the procedures for installation and disassembly, please read “Installation of Kebab MkII system”.

# Use the work holder

The work holder can curb the horizontal shifting of the work during rotation and reduce the misalignment of drawing that happens while drawing several times.

- You can use the work holder for the work with a large diameter.
- When drawing the work with a small diameter, remove the work holder.
- You may not be able to use the work holder even for the work with a large diameter, depending on the shape of work.

## 1 Loosen the screw of the left work holder, and move it to the position where it does not collide with the work to be set.

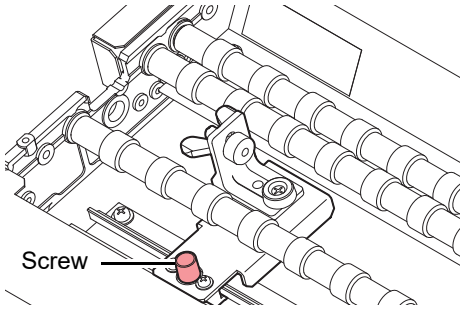


## 2 Lightly loosen the screws (2 pieces) retaining the right work holder.

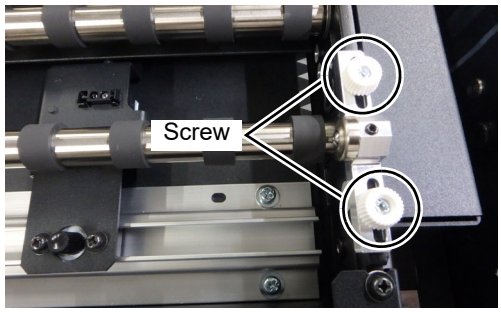


## 3 Place the work near the right work holder.

- After this, make sure that the work and work holder are placed a little away from each other to adjust the right work holder.

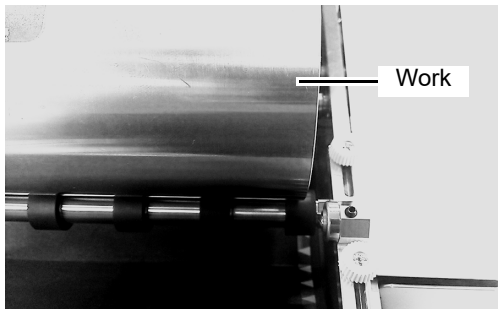


## 4 Move the ball part of the work holder on the right work holder so that it lines up with the flat part of the side of the work.

- When lining it up with the side that is uneven, it may affect drawing; try to line it up with the part that is as flat as possible.

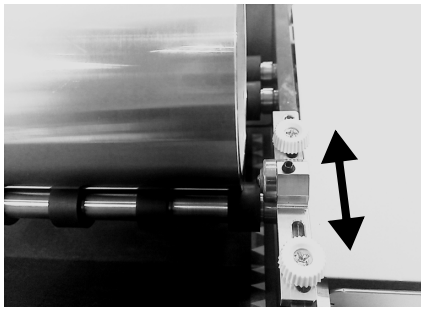

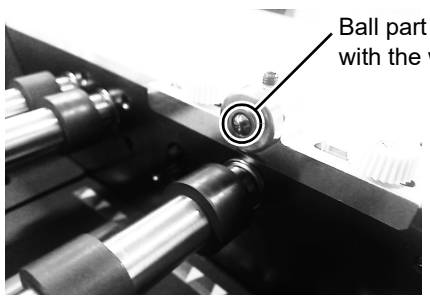

## 5 Tighten the screws (2 pieces) retaining the right work holder.

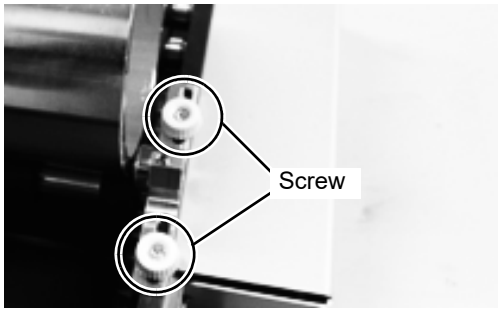


## 6 Put the ball part of the right work holder and the work together.

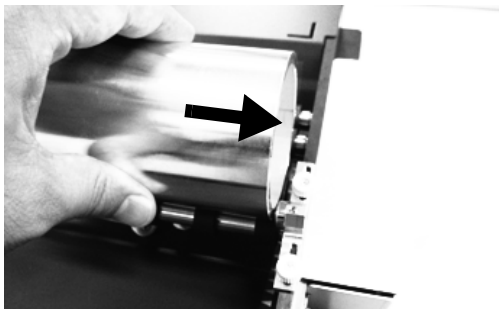

## 7 Place the left work holder close to the work.

- Place the work and left work holder several centimeters away from each other to adjust the left work holder later.

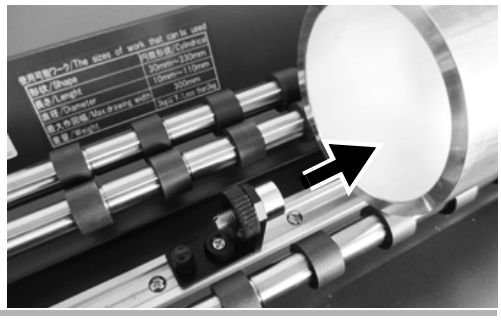

## 8 Align the height of the ball part of the left work holder with the flat part of the side of the work.

- Loosen the thumbscrew of the supporting section of the ball, adjust the height, and then tighten the nut.
- When lining it up with the side that is uneven, it may affect drawing; try to line it up with the part that is as flat as possible.

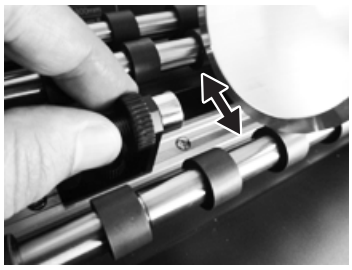

How to loosen or tighten

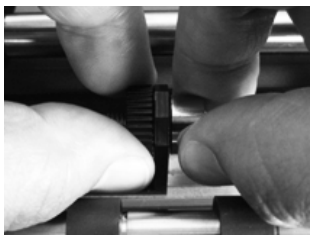




## 9 Slide the left work holder, and put the ball part of the left work holder lightly to the work.

Important!

- Make sure that the work holder and the ball touch each other lightly; otherwise the work may raise and affect drawing depending on the mass of work.



## 10 Tighten the screw of the left work holder.

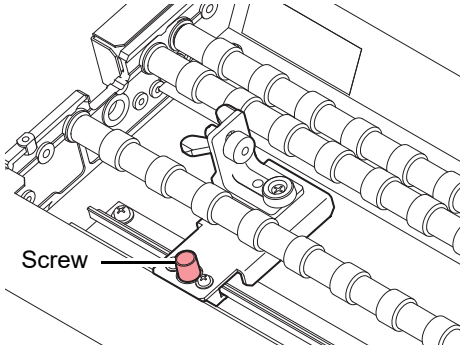

# Remove the work holder

When drawing the work with a small diameter, remove the work holder to avoid it from colliding with the print head or slider.

## 1 Remove the right work holder.

- Loosen and remove the screws retaining the right work holder.

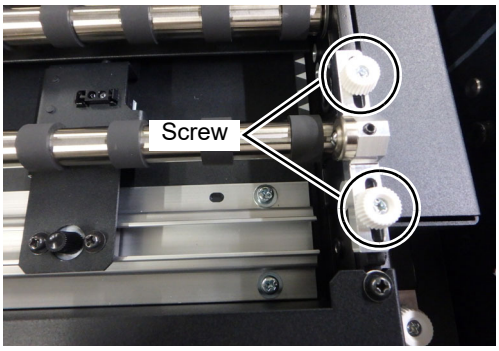


## 2 Remove the left work holder.

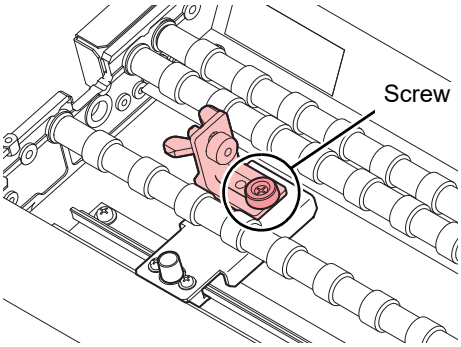

# Use the origin mark detection

When you use the origin mark detection, the origin mark attached to the work for each drawing is detected. You can reduce the misalignment of drawing in the rotation direction of the work as the starting point of drawing is aligned.

To use the origin mark detection function, you need to make the setting on the printer in the following procedure.

Important!

- The origin mark detection function is only available for the work with a large diameter.
- When you turn off the printer, the setting for the origin mark detection is reset. If you want to use the origin mark detection function, make the settings again when you turn on the power.

## Set the origin mark detection

**1** **Press the FUNC1 key in the local mode.**




**2** **Press ▲ ▼ to select [Environment Setting] for the UJF200 or [SET UP] for other models.**

**3** **Press the ENTER key.**

**4** **Press ▲ ▼ to select [Kebab Tool].**

**5** **Press the ENTER key.**

**6** **Press the ENTER key.**

- Select the origin mark detection.

**7** **Press ▲ ▼ to select ON/OFF.**

- When you set it to ON, the origin mark is detected at the following timing:

(1) Before drawing
(2) When you finish setting the work.
(3) When starting Kebab origin point settings.

**8** **Press the ENTER key.**

- You can set the origin mark detection.
- Press the END key several times to end the setting.

# Use the origin mark

## 1 Attach the origin mark on the work.

- Use the tape with a width of 12 mm or longer and 25 mm or shorter or a length of 15 mm as the origin mark, and attach it to the work.

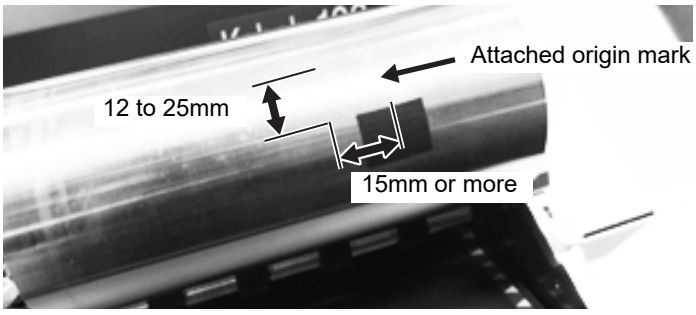


Important!

**Different types of tape for the origin mark should be used depending on the surface of the work.**

- For the work with a high reflection surface, such as aluminum, use the tape with low reflectivity such as the supplied black tape.
- For other works, use the tape with high reflectivity such as the supplied aluminum tape.
- If the work is wrongly detected such as when the work has designs and so on, put black tape around the work, and place aluminum tape as the origin mark on the black tape.

**We recommend that you do not draw on the surrounding area where you attach the origin mark.**

- This is because you may misidentify the printed part as the origin mark from the second drawing on.

## 2 Remove the origin mark sensor cover

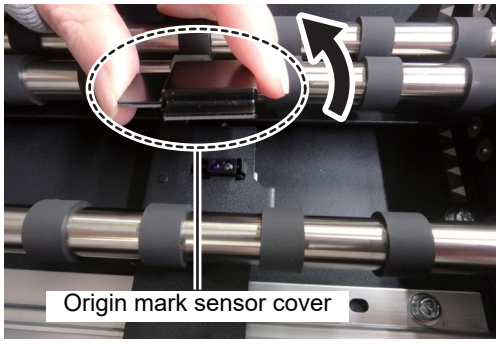


## 3 Loosen the screws retaining the origin mark sensor.

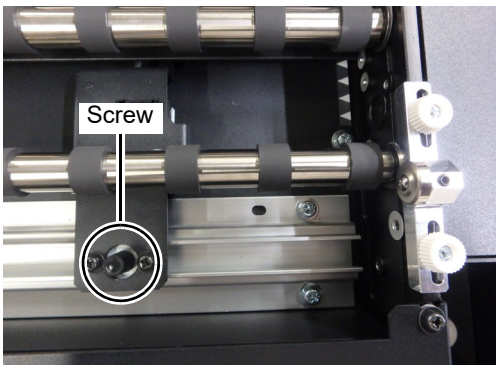

## 4 Align the positions of the origin mark of the work and the origin mark sensor.

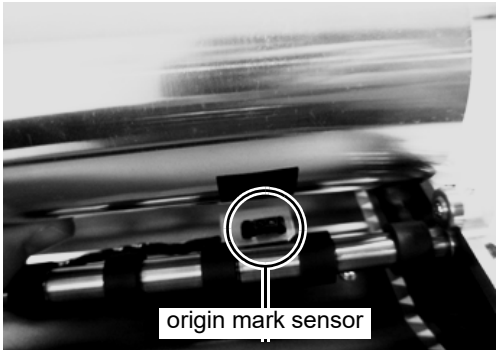


## 5 Tighten the screws and fix the origin mark sensor.

- You can check the origin mark sensor and origin point mark by making settings for the work or Kebab.

## When not using the Origin mark sensor

Attach the Origin mark sensor cover when not using the Origin mark sensor as to prevent contaminants such as ink and dust from entering.

- The Origin mark sensor is fixed in place with magnets near the Origin sensor.

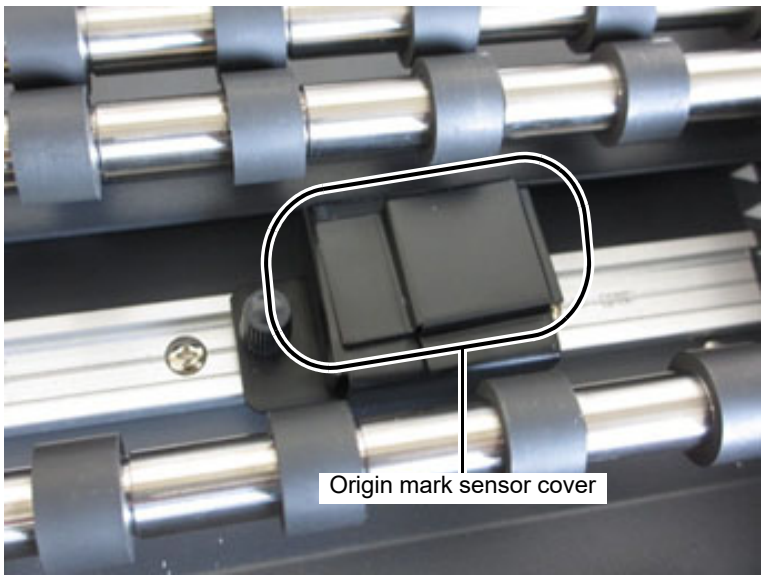

## Responding to “ERROR 524 WORK ORIGN MARK”

The “ERROR 524 WORK ORIGN MARK” occurs when the Origin mark could not be detected due to an abnormality occurring during Origin mark detection operations.

Follow the procedures described in the table below to resolve the problem. If no improvement is seen after responding to the problem, please contact the distributor or one of our sales offices.

| Cause | Solution |
|---|---|
| The Origin mark sensor cover remains attached. | Remove the Origin mark sensor cover when using the Origin mark sensor. ☞ P.39 |
| The Origin mark placed on the work and the sensor position do not match. | Match up the Origin mark with the sensor position again. ☞ P.39 |
| The Origin mark cannot be recognized because the reflection of the work surface is the same as that of the Origin mark. | Try using a different tape (black tape if using aluminum tape, aluminum tape if using black tape).<br>If it still cannot be detected, use aluminum tape as the Origin mark after attaching one round of black tape. |
| There are markings and unevenness on the work surface. (Markings and unevenness on the work surface may lead to the misrecognition of the Origin mark). | For markings, use aluminum tape as the Origin mark after attaching one round of black tape.<br>For level differences, attach the Origin mark on a circumference of the surface where there is no unevenness. |
| The Origin mark cannot be detected because it is either too large or too small. | Have the Origin mark be of an appropriate size. ☞ P.39 |
| The work does not rotate during Origin mark detection operations. | Check whether there are any points that may be preventing the work from rotating. |
| The Origin mark sensor is dirty. | Clean the Origin mark sensor. ☞ P.55<br>If the grime cannot be removed after cleaning and an error message appears, please contact the distributor or one of our sales offices. |
| A strong light hits the Origin mark sensor when detecting the Origin mark. | Change the direction of the lighting, or close the curtains on windows letting through daylight so that a strong light does not hit the sensor. |

# Set the start position of drawing

## 1 Press the MENU key in the local mode.




## 2 Press the ▲ ▼ to select [Kebab Origin Set].

- The [Kebab Origin Set] menu is displayed only when installing the Kebab MkII (MkII L) system.
- Enter the diameter of the work before selecting the menu as the table height differs depending on the diameter.(☞ P.32)

## 3 Press the ENTER key.

- The table moves up and down depending on the diameter of the work, and the table moves forward.
- If a warning message “WORK High” is displayed while the table is moving forward, refer to P.32 “Set a work” on page 14 and set the work diameter again, and then start from step 1.
- Once the table has finished moving, the mode is set to the Kebab origin point setting mode.
- When [OriginMarkSearch] is “ON”, start Origin mark detection.

## 4 Press ◀ ▶, and move the red light pointer “●” mark over the work.

- Move the light pointer mark to where you want to draw, and then set the origin point position.
- When you press ◀ ▶, the slider moves sideways.
- When you press ▲ ▼, the work over Kebab rotates.

## 5 Press the ENTER key when the drawing origin is determined.

- The origin is changed.

Important!

- If you press the [END] key without pressing the [ENTER] key, the settings you have made up to step 4 is canceled, and the work you have set over Kebab rotates and moves back to the position before the setting menu.

# Set the Feed Direction Origin to the Center (UJF200 Only)

When [Feed Dir Origin Center] is set to ON, the specified origin becomes the center of the print image in the feed direction. If you want to align a newly printed logo with a logo already printed on a bottle or similar object, turning this setting ON allows you to set the origin position without having to calculate it from the image.

*Even if this setting is enabled, centering may not be applied depending on the RIP software you are using.

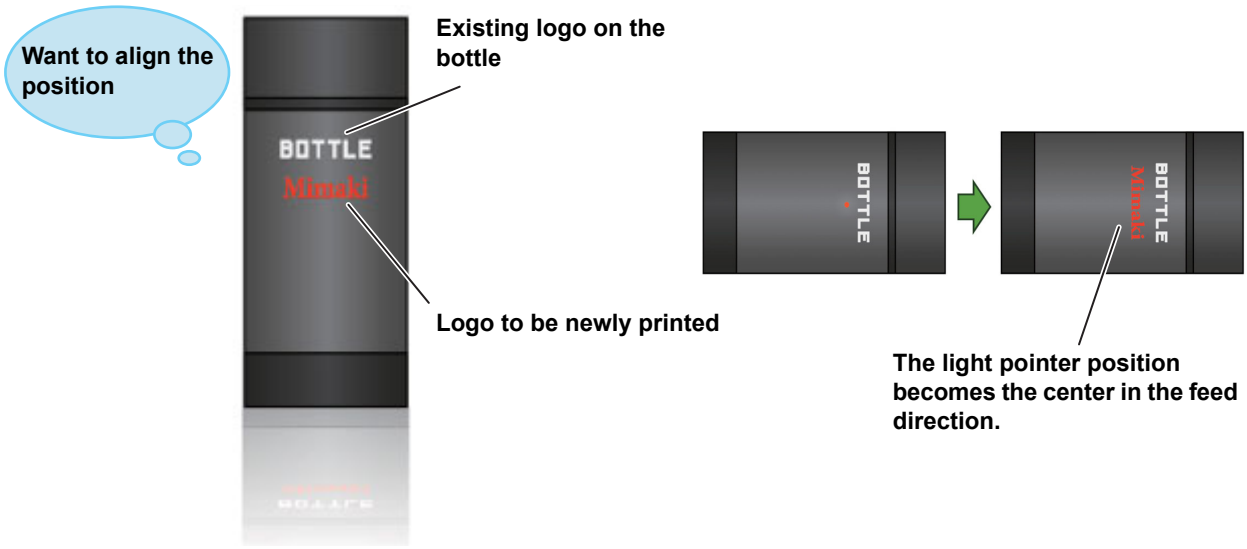


**1** **Press the FUNC1 key in the local mode.**

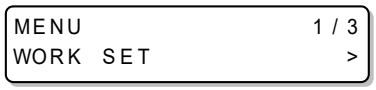


**1** **Press ▲ ▼ to select [Function Setting], and press the ENTER key.**

**2** **Press ▲ ▼ to select [Kebab Tool], and press the ENTER key.**

**3** **Press ▲ ▼ to select [Feed Dir Origin Center], and press the ENTER key.**

**4** **Press the ▲ ▼ to select [ON] or [OFF], and press the ENTER key.**

- To cancel, press the [END] key.

# Create data to be drawn

Create data to be drawn on the work.

- Create data to be drawn in the format below:
  PS, EPS, TIFF, JPEG, BMP and PDF1.4
- Prepare the development work data for drawing.

Important!

- We recommend that you create the data for drawing at the actual print size. If you enlarge or reduce the size after the data for drawing has been read with RasterLink, the aspect ratio of the image may be changed, and so on.

## Measure the work size

First, measure the correct work size.

You have to check the sizes below in advance to draw.

- **Size of the following illustration (A: circumference of the work, B: height of the work)**
- **Size of the drawing data to be printed on the work (Work circumference =A / work height =B)**

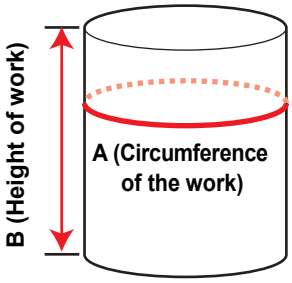


**Height and width of development diagram**



# Test drawing

Before drawing, perform test drawing and check that there is no drawing defect such as nozzle clogging (slight touching of ink or nozzle missing).

## 1 Set the media for test drawing at the rear of Kebab MkII system/ Kebab MkII L system.

- Attach the media with a tape or something similar.

Important!

- In case of using UJF-3042MkIIseries / 6042MkIIseries while taking off two sustaining shafts (the work diameter is more than 65mm), perform the test drawing by setting a provided dummy table.

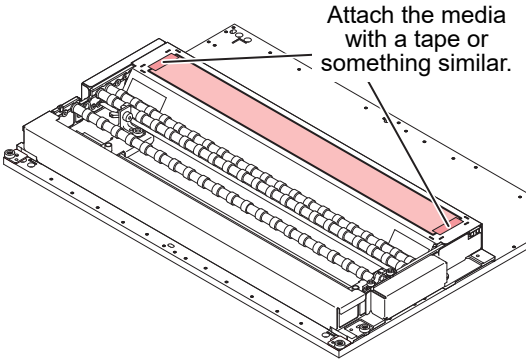


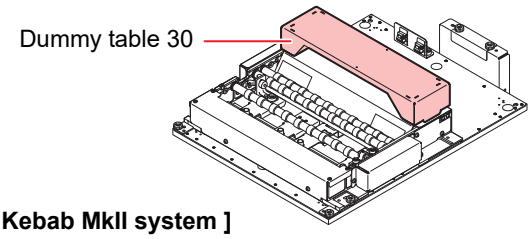


[ Kebab MkII system ]

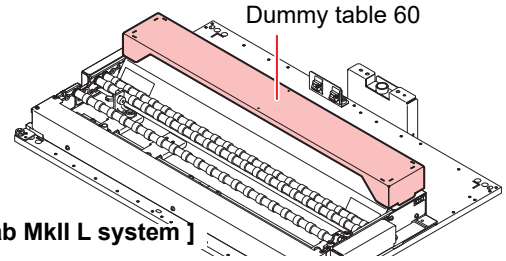


[ Kebab MkII L system ]

## 2 By referring to the Chapter 2 “Perform test drawing” of the operation manual of the using printer, perform the test drawing.

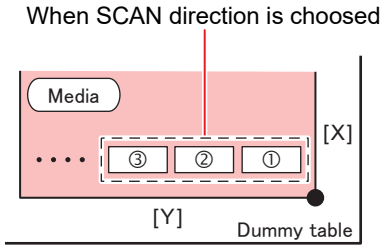


- The origin of X and Y and the height of head are automatically set.
- When choosing the SCAN direction, printing is done in order of ①→②→③⋯. When exceeding the print area, it returns to the position of ①.
- When choosing the FEED direction, printing is done at the position of ①.
- Check the drawn result and when it is normal, draw the data.
- If an abnormality occurs, perform head cleaning. (Refer to the Chapter 2 “Perform head cleaning” of the operation manual of the using printer.)

- When drawing on an actual work after performing a test drawing, it returns to the original point that was set in the process of the start position of the drawing (☞ P.42) .
- When doing a test drawing, remove the work holder. If there is the work holder, a drawing may have unintended gaps.

# Enable Kebab printing

To draw using Kebab MkII/Kebab MkII L, you need to enable the Kebab printing function in RasterLink.

## 1 Select the [Enviroments] - [Printer Management...] menu.

- “Printer Management” dialogue is displayed.

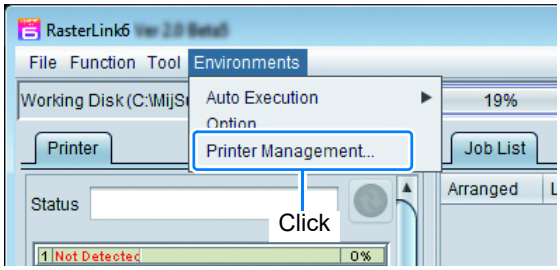


## 2 Click the printer to use, and then click [Function icon].

- “Function icon setting” dialogue is displayed.

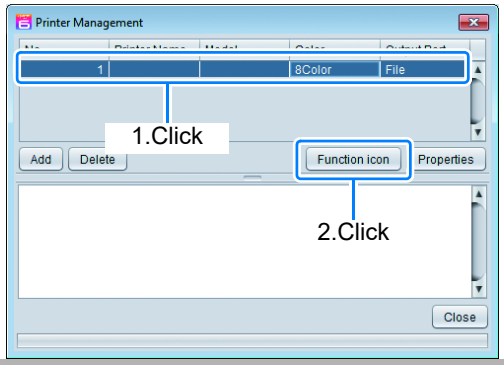


## 3 Check the “Kebab Jig Print”.

## 4 Click [OK].

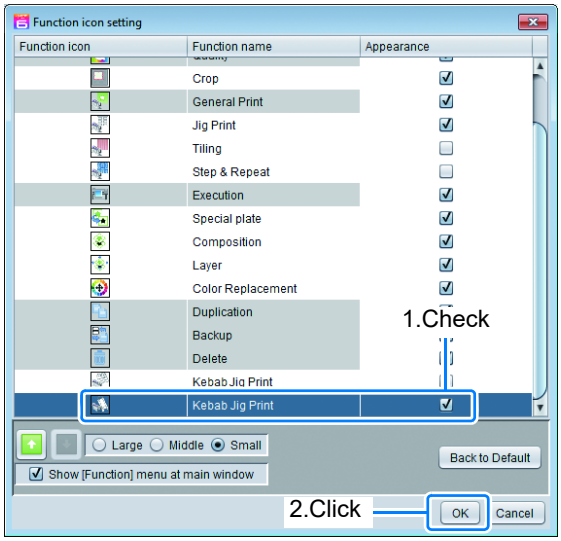


## 5 Click [Close] and finish Printer Management.

- The “Kebab Jig Print” icon is displayed.

# Drawing an image from source data

Important!

- When you draw the work with a light mass or unevenness, the data may not be drawn accurately as it may slide due to the low friction of the work and rollers and so on.
  We recommend that you test draw with a sample work before drawing the actual work.
- Read this manual thoroughly, as well as the reference guide for RasterLink.

**You can adjust the size of the data for drawing, by creating the job for adjusting the print size based on the work in RasterLink (Create Circumference measure Job).**

- With RasterLink, a job is automatically created based on the work diameter that is entered to check the size to draw on the work. (☞ P.50)

## Starting the drawing operation

### 1 Set the work for adjustment.

- Referring to the P.32 “Set a work”, set a work.
- Measure the size of the work to draw beforehand, and prepare the drawing data that perfectly matches the circumference and height of the work. (☞ P.44 “Create data to be drawn”)

### 2 Press the REMOTE key in the local mode of printer.

- The machine goes in the remote mode and data from the computer can be received.
- The table height is displayed.

### 3 Spool the data for drawing with RasterLink6.

- Select the [File]-[Open] menu.

### 4 Select the file to draw, and then click [Open].

- The file is read and displayed on the list of the jobs.

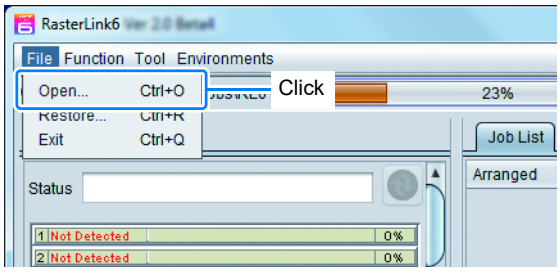


### 5 Select the job to draw.

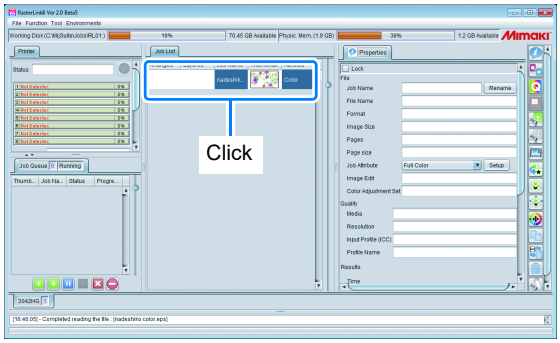

## 6 Click (Kebab Jig Print) icon.

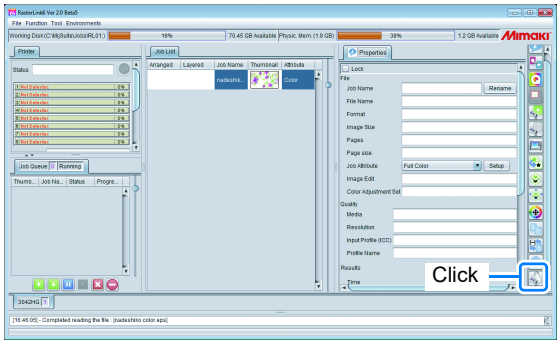


## 7 Check “Kebab Edit”.

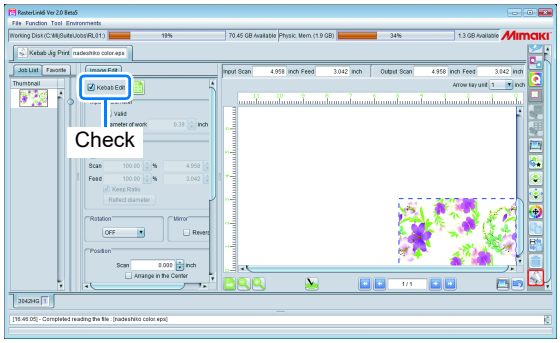


## 8 Click (Exection) icon.

- The [Execution] menu is displayed.
- Select [RIP and Print] or [Immediate Print], and click [Start].

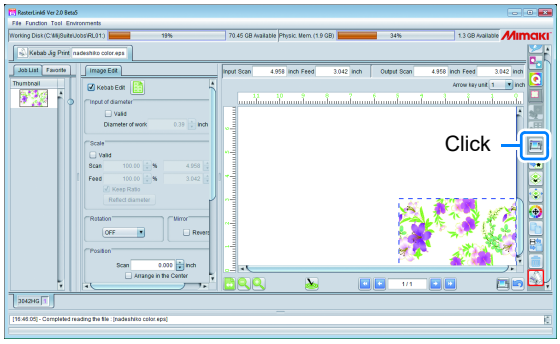


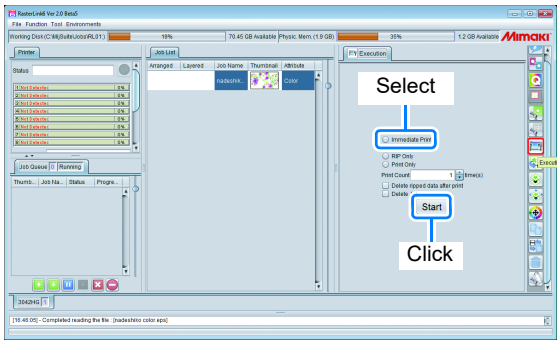

## 9 Transmit data to be drawn from the computer.

- Drawing conditions are displayed.
- As for the data transmission method, see the operation manual of the output software.

**[ UJF-3042MkIIseries/6042MkIIseries, UJF200-3042/6042 ]**

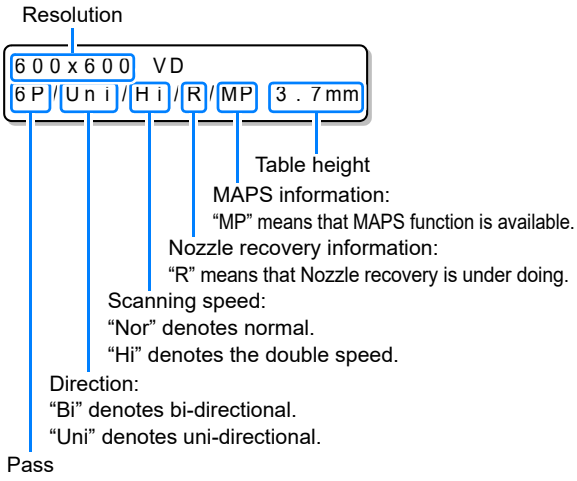


**[ UJF-7151 plus series ]**

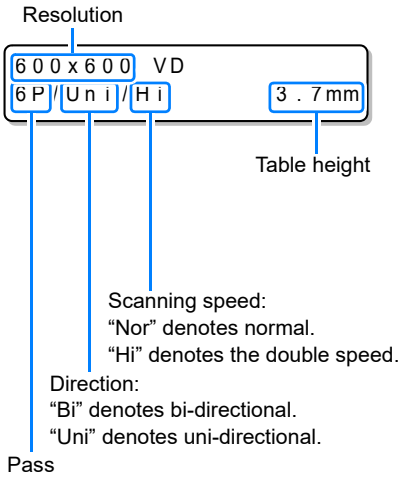


## 10 Start drawing.

## 11 Taking out the media after completion of drawing.

## Interruption of drawing

To interrupt drawing, stop the drawing operation and erase the received data from the machine.

## 1 Stop data sending from the computer.

## 2 Press the FUNC3 key while drawing.

- Drawing operation stops.




## 3 After pressing the SEL key, press the DATACLEAR key.




## 4 Press the ENTER key.

- Received data is erased and the machine returns to the local mode.



## Use the job for adjusting the print size (Create Circumference measure Job), and check the actual print size.

If it is difficult to know the print size with the actual print data, use the job for adjusting the print size (Create Circumference measure Job) instead.

When you use Create Circumference measure Job, the work is printed as shown in the illustration on the right.

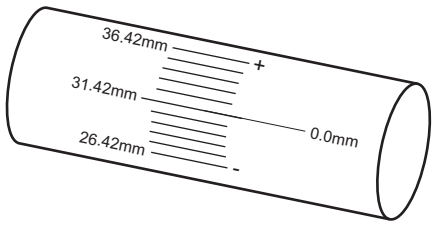


### 1 Follow the steps 1 to 4 of “Starting the drawing operation”.

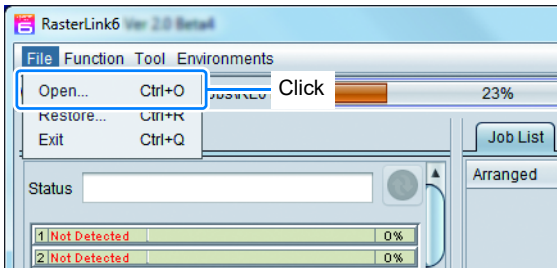


### 2 Select the spool job, and click the (Kebab Jig Print) icon.

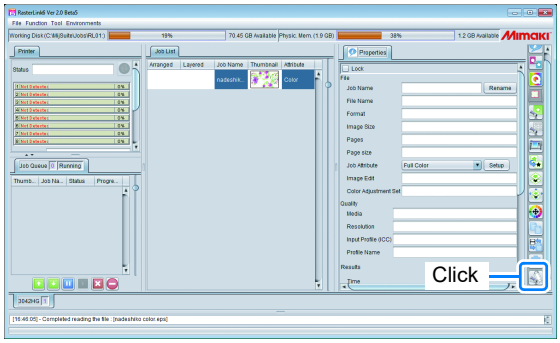


### 3 Check “Kebab Edit”, and then click the (Create Circumference measure job.) icon.

- The Create Circumference measure Job dialogue is displayed.

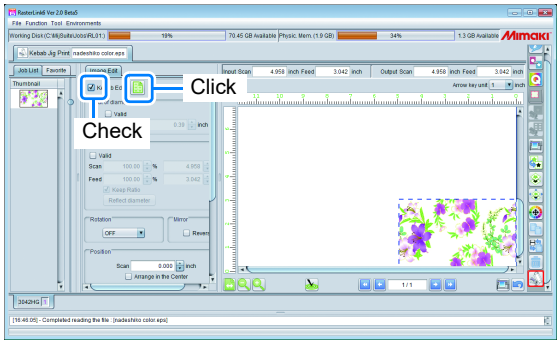

## 4 Set the work diameter and the width and color of the lines to print.

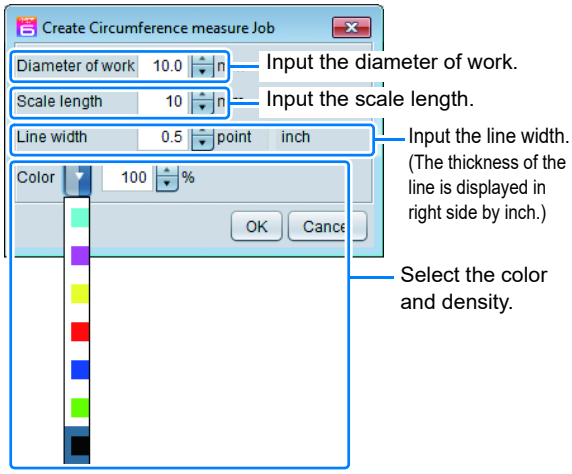


## 5 Click [OK].

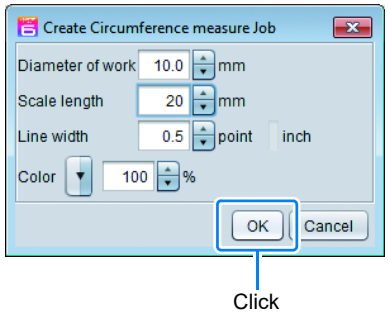


## 6 Display the job list, and then click Create Circumference measure Job you created.

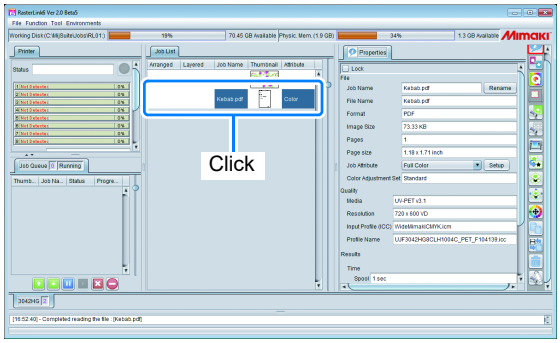


## 7 Perform the operation from step 8 of “Starting the drawing operation” and draw the data.

- Check the drawing result, and check the circumference.
- When you actually draw the data, correct the data based on the circumference you have checked, or click “Reflect diameter” button on [Scale] beforehand.

# 8 Check the drawing result.

- When you draw Create Circumference measure Job, scales are printed for the print start position (0.0 mm) as well as the end position.
- The pitch of the scales for the print end position is 1 mm.

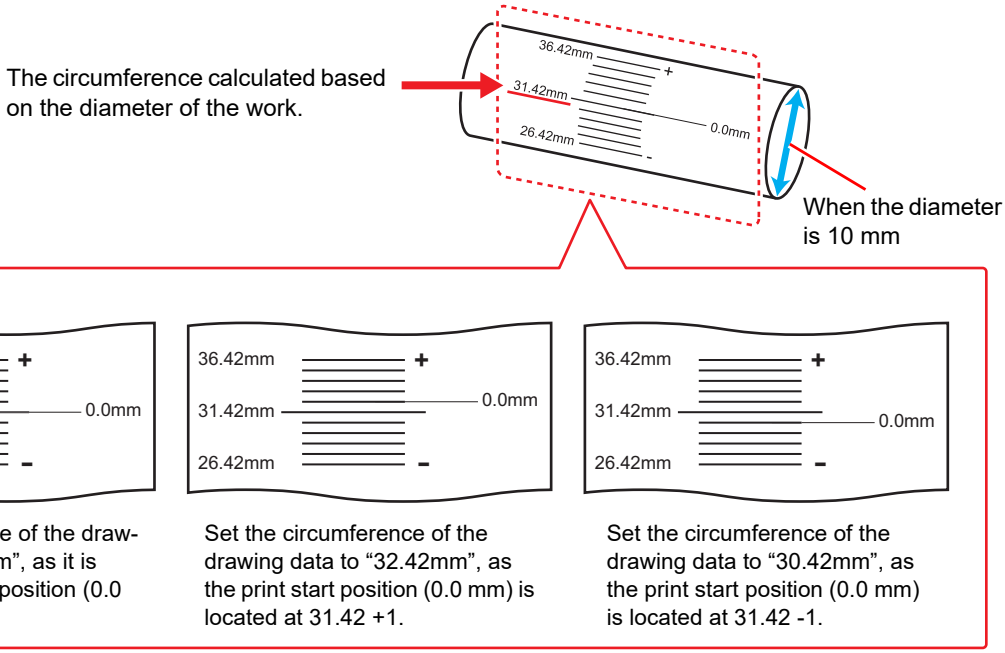

## To draw the data that perfectly fits the drawing area of the work

If the drawn images are overlapped or have a gap between each other when using the sample work, try the following so that the images perfectly fit in the work size.

**1** **Follow the steps 1 to 4 of “Starting the drawing operation”.**

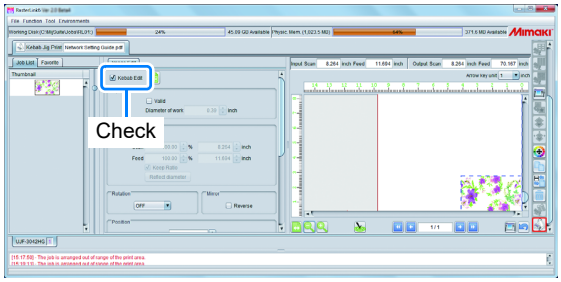


**2** **Check “Valid” in the [Input of diameter] screen, and directly enter the diameter of the work you are going to set.**

- The circumference of the work is automatically calculated once the diameter of the work is entered.

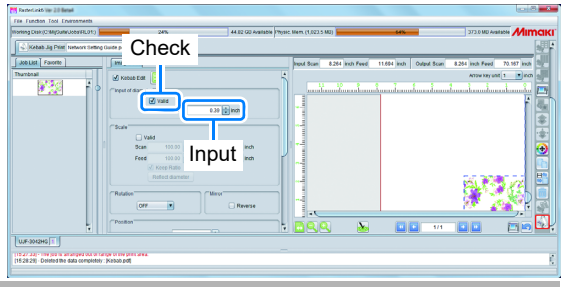


**3** **Check “Valid” in the [Scale] screen, and then click “Keep Ratio”.**

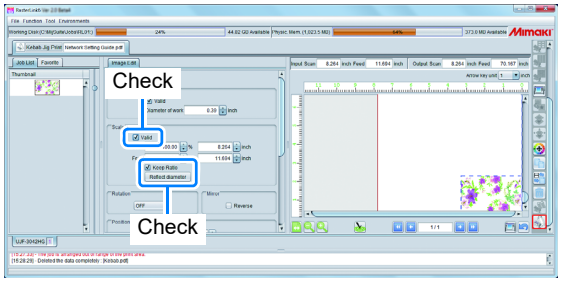


**4** **Perform the operation from step 8 of “Starting the drawing operation” and draw the data.**

# Maintenance

## Cleaning the roller shafts

Clean the roller shafts when they become dirty with ink using the procedure described below to ensure that this product can be continually used over a long period of time.

- Make sure to put on goggles and gloves before cleaning. (Use the goggles and gloves that come as accessories with printer).
- Make sure that the cleaning liquid does not come into contact with your skin.
- Remove the Kebab MkII system from the printer body before cleaning.

| | | | |
|---|---|---|---|
| **Tools** | • Glove | • Goggles | • Paper towel |
| | • BEMCOT (A101437) or a maintenance cloth (SPC-0574) | | |
| | • F-200 / LF-200 Washing Liquid 100 (SPC-0568) | | |

### 1 Cover the area below the roller to be cleaned with a paper towel and attach a cover on the origin mark sensor.

- This will prevent the cleaning liquid from coming into contact with the cover and the origin mark sensor.

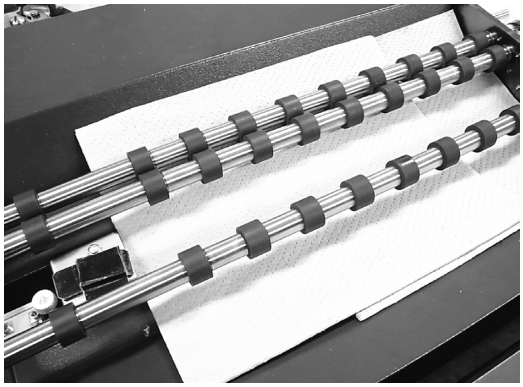

### 2 Rotate the roller shaft until the rubber part that is dirty with ink comes into view.

- Pinch the metal part of the roller shaft with your fingers and slowly rotate the roller.

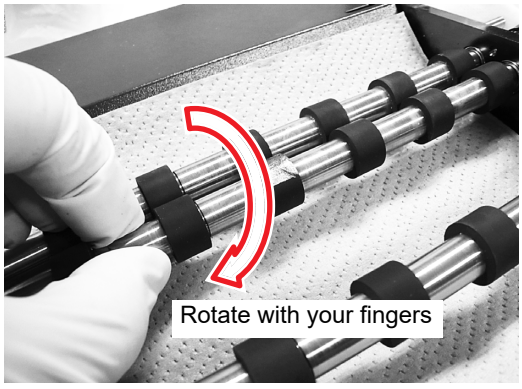


### 3 Rub the part that is dirty with ink forwards and backwards with a BEMCOT that has been dipped in cleaning liquid.

- Hold the roller with your fingers when rubbing it with a BEMCOT so that it does not rotate.
- Take care so as not to rub too hard.
- Take care so as not to have the cleaning liquid come into contact with parts other than the roller shaft, such as the origin mark sensor, and the cover.

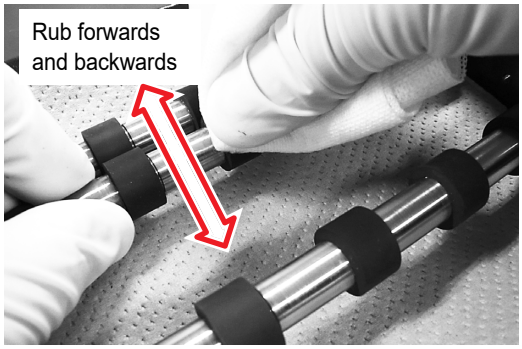

## 4 Wipe away the cleaning liquid attached to the roller shaft with a paper towel.

- Gently press a paper towel on to the roller shaft and slowly rotate the roller shaft with your fingers.
- Wipe away the cleaning liquid until the rubber parts do not have a glossy appearance. If they do have a glossy appearance, elements of cleaning liquid remain.
- Take care so as not to forcibly press down on the roller shaft.
- Repeat steps 2 to 4 when there are multiple areas that require cleaning.

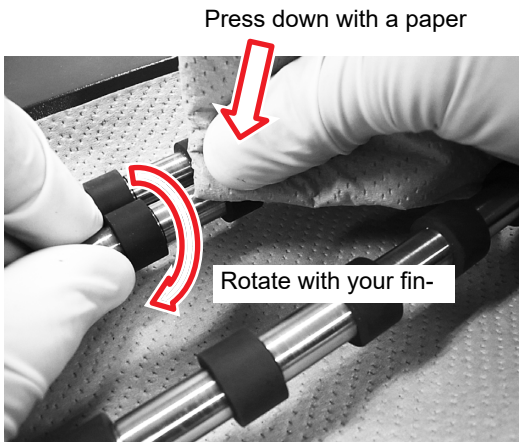


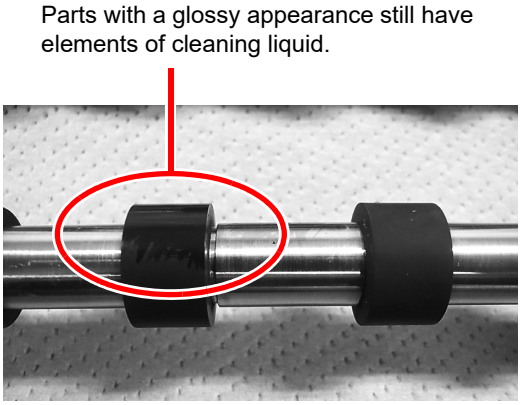


## Cleaning the Origin mark sensor

The buildup of dust and other particles in the origin mark sensor can cause the erroneous detection of the origin mark.

Remove any dust, etc. that has built up on the surface of the sensor with a cotton swab.

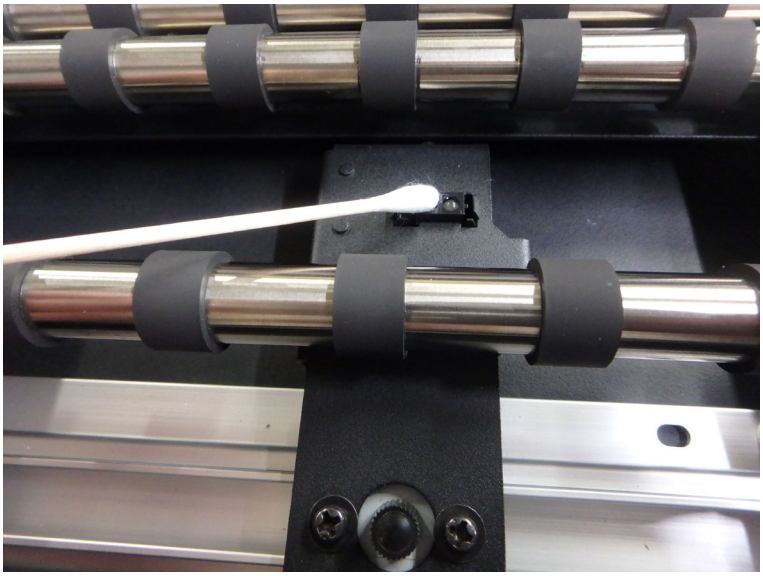

# Specifications

| Item | | Specifications | |
|---|---|---|---|
| | | **Kebab MkII system** | **Kebab MkII L system** |
| Supported printer | | UJF-3042MkII, UJF-3042MkIIe EX, UJF-3042MkIIe, UJF-3042MkIIe EX UJF200-3042 | UJF-6042MkII, UJF-6042MkII e, UJF-7151plus, UJF-7151plusII UJF200-6042 |
| Resolution | | Complies with the supported printers | |
| Drawing mode | | | |
| Usable inks | | | |
| Usable works | Shape | Cylindrical work | |
| | Length | Over 30 mm, under 300 mm | Over 30 mm, under 600 mm |
| | Diameter | Over 10 mm, under 110 mm | |
| Maximum drawing range | | Length 300 mm or less | Length 600 mm or less |
| Usable work weight | | Small diameter: no more than 1.5 kg, Large diameter: no more than 2.0 kg | |
| Interface | | Connect with the supported printer using the dedicated connector | |
| Power requirements | | Supply electricity from the supported printer using the dedicated connector | |
| Safety standards | | FCC-Class A, CE Marking, CB Report, UL60950-1 (When connected with the supported printer) | |
| Weight | | Approx. 3 kg | Approx. 6 kg |
| External dimensions | | (W) 370 x (D) 310 x (H) 65 mm or less | (W) 680 x (D) 310 x (H) 65 mm or less |

*1 Must be upgraded to the corresponding firmware.

*2 No contact with other workpieces or units.



KM

© 2016 MIMAKI ENGINEERING CO., LTD.